THIS MONTH WE SALUTE
ORLANDO AMATEUR RADIO CLUB
FOR A WONDERFUL HAMFEST

[redacted]

FLORIDA SKIP

Vol. 11. No. 12 | The All-Florida Radio Amateur's Publication | MAY 1968 | Price 20c

1968 Armed Forces Day Communication Tests

On Saturday May 18, 1968 the Department of Defense will sponsor the observance of Armed Forces Day. In order to foster the continually growing rapport between the civilian and military communities, the Departments of the Army, Navy and Air Force will conduct U.S. Amateur radio operators and selected military communications stations.

The military stations participating in the military - to - amateur crossband operation and receiving contests for both continuous wave (CW) and radioteletypewriter (RTTY) modes of operation are:

NSS - Washington, D.C.
NPG-San Francisco, California
WAR - Washington, D.C.
AIR - Washington, D.C.

Those amateurs establishing two-way contact with participating military stations will receive a specially designed QSL card confirming crossband communications. For those demonstrating operating proficiency by receiving a perfect copy of the Secretary of Defense message(s) transmitted during the receiving contest portion of the communications tests, a special Department of Defense certificate will be awarded.

Due to a space shortage we suggest you check QST, or CQ for a complete listing of all times and frequencies.

Silent Keys

We are deeply sorry to report the following silent keys this month:

Elmer Kinkade W4KM owner of KINKADE Radio, Tampa, Fla.

Ted Sprink, W4AW, Ft. Lauderdale, Fla.

Seier Malling - Holm, WA4 - KET, Hollywood, Fla.

New Traffic Guide

The Second Edition of the Florida Traffic Handlers Routing Guide will be available at the ORLANDO HAMFEST. Once again, Florida SKIP will be distributing this publication.

Over 300 calls are listed alphabetically, georgraphically and by net affiliation. In addition the FTHRG will contain a National Traffic System Flow Chart, TOLL-FREE call info for Florida cities, a City Designer List, International Routing Outlets, QN sigs and other valuable information for the traffic handler. The guide is expandable, leaving room for new calls to be added.

We recommend this guide to

(Continued on Page 16)

Interference Bill

On March 12 by voice vote the House of Representatives passed HR 14910 which would give the Federal Communications Commission power to control the manufacture, distribution and sale of electrical devices capable of causing interference to radio communications. The measure now goes to the Senate. Amateurs interested in its passage there may wish to record that fact with their Senators. Other details on this bill will be in the May issue of QST. (ARRL OB 159).

New FCC Rules

FCC has made minor amendments to its rules governing the moving of a station from one permanent address to another. An application for modification must be submitted within four months after the move, and before any operation takes

(Continued on Page 16)

WHAT IS SO RARE . . . THERE IS NOTHING like a Field Day in the woods - - says the Panama City ARC. While the OM's racking up points, the XYLs take it easy in the shade and get chow ready. Are you making FD plans for June 22nd and 23rd?

(photo by W5MPK/4).

FLORIDA SKIP, INC.
P.O. Box 501
Miami Springs, Florida 33166

Enclosed is $2.00 for 1 year or $5.00 for 3 years for my membership to Florida Skip.

☐ New ☐ Renewal

My CORRECT address is:

Name _____ **Call** _____

Address _____

City _____

& State _____ **Zip** _____

EDITOR – Andy Clark, W4IYT
P.O. Box 501 – Miami Springs, Fla. 33166
Vice Pres., Amateur Radio News Service
ADVERTISING MGR. – Frank Orcutt, W4JO
ASS'T. AD MGR. – Jack Wainwright W4IEH
Special Assistants . . . Vance Murr, W4FWI
Dick Blasco, WA4DHU
Box 501, Miami Springs, Fla. 33166

Second class postage paid at Miami, Fla. Published monthly.

The publishers of this paper do not assume responsibility of statements made by their advertisers in business competition. All signed articles published in this paper represent solely the individual opinions of the writer and not those of FLORIDA SKIP.

Deadline – 10th of month in Box 501, Miami Springs, Fla. 33166.

PERMISSION: Anything in Florida Skip may be reprinted in any other amateur radio publication in the world with a Credit Line please.

Dear Mabel XYL Award, c/o Skip, Box 501, Miami Springs, Fla.

FLORIDA SKIP CORRESPONDENTS

IT'S A FACT. Geo. Hunt, W4NUT 1218 S.W. 21st Ct., Ft. Lauderdale.

HINTS & KINKS. R. V. Frederick K4UGC, 460 N. W. 108th Terrace, Miami 33150.

ONYX, MABEL, THE OLD TIMER c/o Florida Skip, P. O. Box 501, Miami Springs 33166.

Q.C.W.A., Hal Bates, WA4FIU, 86 Ventura Dr., Dunedin, Fla. 33528

VHF – Bertha Eggert, WA4BMC, 1510 – 17th Ave., No., Lake Worth.

ARMY MARS, Joseph C. Patterson, AD4TZI, Ft. Pierce, Florida

AF MARS, Alan Strauss, WA4JTK, Carol City, Fla.

NAVY MARS, Jim Wilson W4GDK, 1204 Avacado Isle, Ft. Lauderdale, Fla.

VHF SSB'ers R.D. Ralston. K4LFF P.O. Box 945, Fernandina Beach 32034

NETS

FSBA, K4SRI, Holly Hill
FMTN, W4AKB, Miami
FLAMINGO, W4EDP, Miami
QFN, WA4OHO, St. Pete
TPTN, W4SMK, Ft. Myers

CLUBS

Broward ARC, W4GDK, Ft. Lauderdale
NFARS, K4DSN, Jacksonville
Ft. Myers ARC, W4SMK, Ft. Myers
W. Fla., W4RKH, Ft. Walton Bch.
Orlando ARC, W4BKC, Orlando
HARS W4NQX Tampa
TARC, WA4HDK, Tampa
VERO BEACH ARC, WA4QVJ Vero Beach.
Platinum Coast ARS, WN4FVA, Melbourne
GULFSTREAM SOCIETY of A.R. OPS WB4AID, Lake Worth.
West Palm Beach ARC, John Benjamin, West Palm Beach
So. Miami, W4NE, Miami
DADE ARC - W4EDP, Miami
Suncoast Roving and Floridora, W4BAV, Sarasota
Indian River ARC, WA4KJV, Rockledge

NEXT MONTH . . .

Birth of the Ohm-Meter
By K4HEN

☆

Special on Integrated Circuits
By K4KRJ

☆

About Articles for SKIP
By K4FQU

☆

YL-International SSB'ers
By WA4GUZ

☆

More Photos, Diagrams, Red-Hot News

From The Editor

Recently I heard a very interesting talk given by Mr. Arthur Gilbert, W4HVC of the Miami FCC office. It was brought to our attention by Mr. Gilbert that some people alleging to be radio amateurs have not been conducting themselves according to the amateur radio operators code of ethics. This is mostly on 75 meters, we were told.

Using foul language and suggestive jokes has never been and will never be the measure of a man. We amateurs have a reputation for being ladies and gentlemen, so let those of us who hear any profanity used on the air, take note of frequency, call sign, time of offending stations. It was pointed out that the Ft. Lauderdale FCC monitoring station (Phone LU 3-2511) is manned 24 hours a day. Need we say more?

Adverse publicity is NOT what we need. All the good work done by amateurs can be obliterated by just a few. "One rotten apple can spoil the barrel."

Sure enjoyed the Orlando Hamfest and seeing all our friends. Let's make it again at the 1969 Hamboree in Miami.

Now is the time to start planning for Field Day. SKIP has some beautiful trophies waiting for the winners. Who will they be? 73 AC

Letters To Editor

It has been a long time since I have felt the urge to pick up my pen and write the Editor. However the March SKIP page 11, an article by AFB4JTK about MARS activity and policy needs some backing up. We have an even worse situation in Navy MARS.

As an example – Navy MARS at the local level (Florida) recruited amateurs to join their ranks, in my instance to "come aboard" and help in teletype net type operations. Then suddenly, without prior warning, decided, at the local level, that too many were checking into the net, and that this should be curtailed, and station "A" should only check in on Monday, station "B" on Tuesday, etc. All of this because the net control stations could not handle more than a few check in's at a time. Yet they still are out recruiting.

Then to compound the situation the "local level" without poling the "many other stations involved" was asked to "appraise" a 40 meter (74-95) spot for a Florida training net. Ever try to work short 40 meter skip at 0100 Zulu? When this station asked the simple question – "don't you feel this is a bad frequency for a local RTTY training spot due to the skip condition..." I was told "well this is the Navy way, and you don't have a say in the matter..."

I wonder about that. Knowing the weakness of the frequency he could say "no." The Navy MARS net even has spelling games. To sharpen your "phonetics". Yet all of the signals here are better than 5 - 9. Good practice to be sure, but so needless, ever try to take a straight plain text message when every other or every third word was in phonetics? Mr. L.C. Jones, I spell, etc. etc. Still the Navy way. Back to kindergarten!

They con you into "joining" promising great benefits, but it turns out that in order to reap these benefits, you must be in the club. Invite your local level to spend a week-end, have dinner, then you are eligible for benefits.

I for one have offered RTTY gear for use to "Navy MARS" members for loan no charge, terminal units to get members on the air, NO CHARGE out of my own pocket, sent them to far off states -- and guess what -- I haven't even received a word of thanks. Kiss my foot, or any thing. This too is the Navy way??

I could go on for many, many pages along these lines, but why bother. I will say this however – I have offered my services, stuck my neck and pocket book out, given my time, to the best of my ability, checking into 2 meter an evening 2200Z – 2300Z, foregoing dinner, rushing home from work, in order to "make the nets" to the best of my ability and work load and after about 2 years of "Navy MARS", intermittant as it might be, have as yet to receive a small thank you. Quoting AFB4JTK – March SKIP... "we feel it shows a lack of confidence in the whole civilian part of our program," and in my case AMEN BROTHER AMEN!

In closing, yes MARS, Navy, AF etc does a great deal of good, but, IT could do better if the local leaders would take the local "members" into the act, and stop pointing a finger and shouting -- "This is the MARS way..." but not the democratic way.

Sincerely,
George M. Hunt, NØHXH, W4NUT
P.O. Box 22028
Ft. Lauderdale, Florida 33315

Dear Andy,

I read your Florida Skip from cover to cover, always looking forward to receiving it.

I have been in MARS since two months after its conception in November 1948. I first started in Air Force MARS, later converting to Army MARS for a short period, finally returning and remaining in Air Force MARS member but do claim to have extensive knowledge of Air Force MARS.

In reading the Army, Navy, and Air Force MARS columns in the Florida Skip, I find that AFB4JTK/AFC4-BND of Air Force MARS are misinformed at least on one bit of the

(Continued on Page 13)

Build Your Ultimate TRAP-MASTER Beam

TRAP MASTER

TA-31 or TA-31 JR.

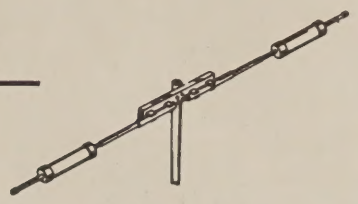

Hams, who would like to eventually own a 3-element Junior or Senior beam, may find the special Trap-Master conversion kits ideal for their needs. (*beams with broad band capacitive matching may not be converted!). Shipping weight: TA-31 Senior 13 lbs.; TA-31 Junior 11 lbs.

Start from a simple one element Mosley Trap-Master 10, 15 and 20 meter dipole. See page 6.

TA-32 or TA-32 JR. KIT

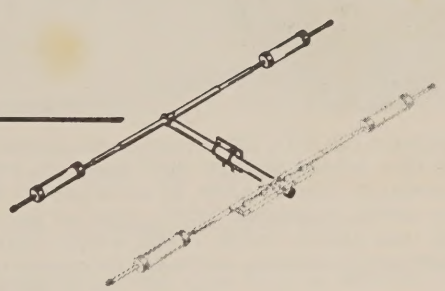

CONVERSION KIT TA-31 – 32
CONVERSION KIT TA-31 – 32 Jr.

Two elements: Add a reflector element, a boom, boom-to-mast plate and necessary hardware. For specifications and performance data see page 7. Shipping weight: TA-31-32 Kit 20 lbs., TA-31-32 Jr. 16 lbs.

TA-33 or TA-33 JR. KIT

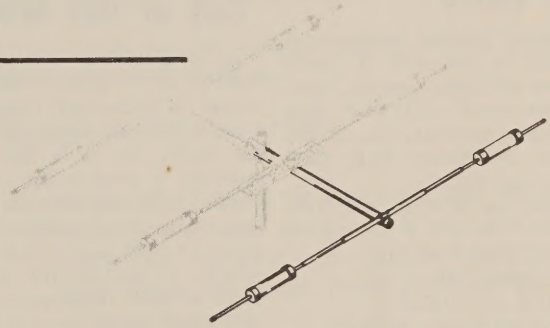

CONVERSION KIT TA-32 – 33
CONVERSION KIT TA-32 – 33 Jr.

Three elements: Add a director element, boom, boom splice and necessary hardware. For specifications and performance data see page 7. Shipping weight: TA-32-33 Sr. Kit 19 lbs., Jr. Kit 14 lbs.

TA-40KR KIT

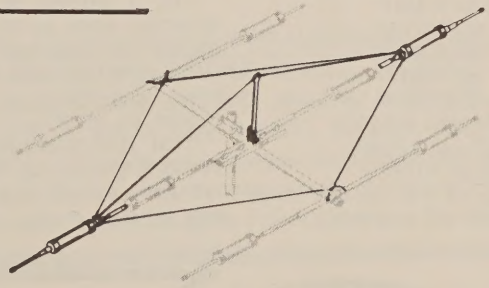

40 Meter CONVERSION KIT . . . TA-40KR

Work 40 meters in addition to 10, 15, and 20 meters by using a TA-40KR kit on the radiator element of the TA-31, TA-32, MP-33, TA-33, and TA-36(*Beams with broad band capacitive matching may not be converted!) Convert all Junior beams to an MP-33 (see below) before adding the TA-40KR kit. Kit shipping weight: 14 lbs. Kit assembled weight: 10 lbs. Adds 10 ft. to existing radiator length.

AMATEUR RADIO CENTER INC.

"THE ONLY EXCLUSIVELY HAM STORE IN MIAMI"

2805 N.E. SECOND AVE., MIAMI, FLA. 33137

OPEN ALL-DAY SATURDAY 'TIL 5:30 P.M.

MIAMI
374-4101

DON'T FORGET WE BUY – SELL – TRADE – SERVICE

FORT LAUDERDALE
524-4484

THE ALACHUA COUNTY CD communications center is well equipped. Here Mich Hudson W4UUW (left) Radio CD Officer and Jack Spencer, WA4UFO, Alachua ARRL EC at the controls. More and more centers are shifting to amateur RTTY. --What are you doing for amateur radio? Join RACES, ARPSC, MARS, a club – anything. Let's get off our duffs and do something worthwhile for amateur radio.

(Photo via K4MZR)

Ex-Calls

We have printed hundreds of ex-calls in the past 11 years and they still keep coming. Have you sent yours? SKIPPER, Box 501, Miami Springs, Fla. 33166.

K4AV ex 8AQO 8RR 8WV W8JC and W9JC
W4ESE ex W7JLM and W1-MSP
WB4CEX ex WA8NZS
WA4IJH ex K3IMP
W4MLE ex W3YKT
K4OYI ex W8SSQ KP4DM
W4VH ex W4DIF
W4IM ex W4GHP
W8AP ex W8MQG
W4KY ex W4IEH
W4IL ex W4HQW
WA4MZL ex K9AGH
W4MND ex W3WSA
W4TIE ex WØROA
K4URA ex W3CK 8ARI 8BWR 9BW KP4DB and 8VNY

Out of This World

In looking over some information on reliability requirements in spacecraft computers I came across some interesting facts. On a 14 day space mission a probability of success of 0.95 requires an MTBF (Minimum time between failures) of 7720 hours, that is 0.9 years. A probability of success of 0.99 requires a MTBF of 33,000 hours or 3.8 years.

For a mission of 1.5 years duration such as will be required for planetary exploration and return to earth, a success probability of 0.99 requires an MTVF of 140 years.

That 1000 hours we are supposed to get on our tubes would not get us outside the Heavyside layer! - Onyx

From the Press

(Editor's Note: Here is a perfect example of "good amateur Radio publicity." It appeared in the Miami News, March 1st. Let's keep alert for more such stories for YOUR paper and/or TV-radio. Call in the story promptly as they refuse old news.)

MIAMI HAM HELPS
IN KIDNEY DRAMA
By Al Volker
Science Editor
of The Miami News

Sometime tonight, a Medellin, Colombia woman with failing kidneys will undergo surgery to have specially-made tubing installed in her arm or leg so she can be put on an artificial kidney.

Without the artificial kidneys she would die because her own kidneys are no longer able to remove impurities from her bloodstream.

The appeal for the tubing was heard by Bob Kaplan, 42, a North Miami ham radio operator.

He obtained the parts from the University of Miami Artificial Kidney Center and then put them in the hands of the pilot of Avianca Airlines Flight 67 to Bogota.

Kaplan, who lives at 445 N.W. 202 Ter., said he received a call from a Sarasota radio ham who said that a Colombian radio operator had been calling for help.

Kaplan, WA4WTG, immediately turned in and picked up the signal of Bernie Rabinovich, H-K4BFE.

Rabinovich told him of the emergency, located the doctor and got an exact description of the parts needed. The doctor was able to suggest that the Artificial Kidney Center could supply them.

Kaplan reached Fred G. Anderson, director of the Center, and the parts were given to him.

At 1:05, Flight 67 took off and Kaplan, an ex-Navy radioman, breathed a sigh of relief.

By Hal Bates WA4FIU

The Gator Chapter of the QCWA met Saturday, 23 of Mar. at McDill AFB south of Tampa at noon as the guests of General T. J. Conway W4EII. Not only did we have a very tasty luncheon at the Officers' Club, but we had a bus trip out to the flight line where we were able to get a good look at a lot of the Strike Command facilities. Sixty two members and guests were there and it seemed to be unanimous opinion that everybody had a good time.

The Gator Chapter is going to meet again in Orlando at the Hamfest at the Statler-Hilton Inn, 3200 West Colonial Drive on April 27 and 28. For those who get thirsty there will be a "Shospitality" Room reserved for our use. Election of new officers for the coming year will be had and we are getting ready for another big year ahead. For those who don't know, it the QCWA (Quarter Century Wireless Assn.) is organized to foster and develop friendship and cooperation among amateur wireless operastanding. And to take general interest in all matters affecting or involving amateur wireless or radio and sponsor such actions as may be deemed proper in their interests.

Prizes!
Swap Table!

SPARC
ANNUAL
Hamfest

SUNDAY, MAY 19
9:00 A.M. 'til 3 P.M.

REGISTRATION $1.00 PER FAMILY
OLD-FASHIONED HAMFEST

FUN!
FUN!
FUN!
FUN!

LAKE MAGGIORE PARK
9th ST. & 38th AVE., So.
ST. PETERSBURG, FLA.

Bring Your Own Picnic Lunch

(This year no admission charge for cars entering park)

SLEP ELECTRONICS COMPANY

wants your military surplus equipment!

BUY - SELL - TRADE

AIRBORNE EQUIPMENT: ARC-34, ARC-38, ARC-44, ARC-45, ARC-51, ARC-52, ARC-54, ARC-55, ARC-59, ARC-60, ARC-73, ARC-95, ARC-102, ARC-111, ARC-115, ARC-131, ARC-134, ARN-14, ARN-18, ARN-21, ARN-30D, ARN-31, ARN-32, ARN-52, ARN-59, ARN-67, ARN-68, ARN-82, ARN-83, ART-34, APN-9, APN-22, APN-70, APN-117, APN-122, APN-129, APN-133, APN-134, APN-141, APN-158, RT-279A/APX-25, APX-44, APX-68, APX-72, ARA-25, ARA-31, ARA-41, ARA-48, ARA-50, ARA-54, ARA-56.
COUPLERS: CU-527/AR, CU-942, CU-991/AR, CU-1658. ASQ-3, ASQ-18, ASQ-19, SCR-695A IFF, APA-69, APA-89, ASA-13, ARR-36, VHF-101, 102, COLLINS 17L-6, 17L-7, 51X-2, 18S-4A, 618S-1, 618T, 618F, 618M, 51RV-1, 51Y-4.

GROUND EQUIPMENT: RT-66, 67, 68, 70, 77, PP-112/GR, PRC-8A, 9A, 10A, PRC-25, PRC-41. TRC-24, VRC-24, GRC-9, GRC-19, GRC-27, GRC-46, T-217A, R-278B/GR, MD-129A, UPX-1, UPX-5, UPX-7, UPX-12, TMQ-5, TED, TDE, SPA, URA, SRA, SRT.

RECEIVERS: R-220/URR, R-388/URR, R-389/URR, R-390A/URR, R-391, R-392/URR, R-836/ARN, R-1051, R-1125, R-1297/AR, R-1388/ARN, R-1391/ARN, R-1433/U, COLLINS 51J-3, 51J-4, 51S-1, URR-13, URR-27, URR-29, URR-35, APR-5A, 13, 14, 17, RDO, RAL, SP-600JX, ARR-41.

TEST EQUIPMENT: SG-1A/ARN, SG-2/ARN, SG-3/ARN, SG-12A/U, SG-13/ARN, SG-24/TRM-3, SG-66A/ARM-5, SG-92/U, ARM-5, ARM-8 ARM-11, ARM-22, ARM-25, ARM-31, ARM-45, ARM-47, ARM-63, ARM-66, ARM-68, ARM-69, ARM-92, UPM-98, UPM-99, URM-25, URM-26, URM-32, URM-43, URM-47, URM-48, URM-52, URM-76, URM-78, URM-79, URM-80, URM-81, URM-103, URM-105, URM-120, URM-127, BC-376, ARC H-14, H-16, H-23. Hewlett Packard 606A, 608D, 612A, 616B, 618A, 620A, 626A, etc. Boonton "Q" and RX Meters. HLI-103 Tacan Tester. 479S-3, 479T-2, TS-505D/U, TRM-1, TRM-3, TS-183/U, TS-330/U, TS-510A/U, TS-683/U, TS-710, TS-723/U, etc. MD-1, MD-2, MD-83A/ARN. ALSO OTHER SURPLUS EQUIPMENT WITH PRM, PSM, UPM, USM, URM, GPM, SG, APA, ASA, APR, ASG, ASM, ASN, GRR, PRC, GRC, URC, VRC PREFIXES.

COMMERCIAL TEST EQUIPMENT BY: BIRD, BOONTON, MEASUREMENTS, H-P, NARDA, GR, SPERRY, ARC, GERTSCH, EMPIRE DEVICES, STODDART, LEEDS & NORTHRUP, BENDIX, NORTH ATLANTIC, ESTERLINE ANGUS, CMC, FAIRCHILD.

MICROWAVE TEST EQUIPMENT: All Types.

AIRCRAFT INSTRUMENTS BY: BENDIX, COLLINS, KOLLSMAN, SPERRY, WESTON.

RADIOSONDE EQUIPMENT: AMT, TMQ, GMD.

RADAR: All Types, Airborne or Ground, any part.

AIRCRAFT INVERTERS: 400 Cycle Type by BENDIX, LELAND, JACK & HEINTZ.

TECHNICAL MANUALS: Buy and Sell, Military & Commercial Books.

TUBES: Transmitter Type by EIMAC, RCA, AMPEREX, VARIAN, RAYTHEON, WESTINGHOUSE, etc.

FM MOBILE EQUIPMENT: Buy and Sell

WANTED: SURPLUS SCOUTS IN EVERYTOWN, WORLD-WIDE. Tell us what equipment is available and we will advise you what it is worth in "cash". Earn good money spare time. Refer to this ad for type equipment needed.

TRADE YOUR SURPLUS FOR NEW HAM GEAR:
We Stock: AMECO, BTI, DRAKE, EIMAC, E-Z WAY, GONSET, GALAXY, HAMMARLUND, HAM-M, HY-GAIN, MOSLEY, NATIONAL, SWAN, SBE, SHURE, SONAR, WEBSTER, TRI-EX. We pay shipping on trade-ins. Cash deals paid at once upon receipt. Trades shipped from stock. Complete Packing facilities, export orders shipped F.O.B. Seaport, Tampa, Fla.

WRITE – WIRE – PHONE (813) 722-1843
BILL SLEP, W4FHY

SLEP ELECTRONICS COMPANY

2412 Highway 301 N.
Ellenton, Florida 33532

CLUB NEWS

FLORIDORA NEWS

Cathy Soehl W4BAV

WA4SUG (ex K5LIU and W3YTM)–Mildred Wright, formerly of East Point, Ga., is now a resident of Orlando. Welcome to Florida.

W4GAN-Melba Jibb participated in the YL Contest and made 69 CW contacts the short time she was on. Congrats.

WA4JBS-Kathleen Murray presented OM, Sam-K4BUW with a bouncing 8 lbs. 7 oz. baby boy March 20th. Kathleen was a former Floridora and we hope she will rejoin us.

K4WXS-Lee Kanarian made PEP March 24th. Congrats.

W4EHN-Betty advises they will be going North earlier this year, as OM-Clem will attend a reunion at the High School from which he graduated. The high school is going to celebrate its 100th anniversary.

WB4FTN (ex KP4BCT) - Carmen Agostini was welcomed into the Floridora Net April 2nd. Carmen and her OM, WB4FTY (ex KP4RA)-Herman, formerly of Puerto Rico, who are now located in Kissimmee.

Dates to remember: SPARC Hamfest May 19th, Lake Maggiore Park, 38th Ave. and 9th St. So., St. Petersburg. How about the Floridoras and all YLs getting together there. Also don't forget the YLRL 5th International Convention, June 13-16, at Denver, Colo. We hope the Floridoras will be well represented. It is lots of fun and cannot be really appreciated until you have attended one.

W4IUR-Mims and OM, K4VNA-Walt Cook off on a trip to mountains April 17-25th.

SUNCOAST ROVING REPORTER

CATHY SOEHL W4BAV

SPARC HAMFEST: May 19th, Lake Maggiore Park, 38th Ave. and 9th St. So., St. Petersburg. Come bring your picnic lunch, the family and join in the fun!

The International Handicappers Net meets Mon. thru Fri., on 14.287 at 1600 GMT and all handicaps operators urged to join. Net was organized in 1960 by W6MLZ-Ray Meyers of San Gabriel, Cal. Incidentally, W4BNM/-VE3 Art Wedde, former SPARC member, is an Honorary Member.

K4RKY-Ralph Peters, better known as "Pete" and Betty Landis said "I do" in the Chapel at Bay Pines April 30th. Pete recently purchased a 1964 Plymouth Belvedere and their QTH is just 5 min. from the Gulf of Mexico, on Madeira Beach. Betty is a Veteran of the Korean War and served two "hitches" in the WACs. She is interested in "ham" radio and we are looking forward to having a new YL on the air soon. Congratulations and may you have a long, happy life together.

W4RYV (ex K8TZN) – Liz and OM, W4SOI (ex K8TYZ)-Don Wood were welcomed to the Suncoast at the SPARC meeting April 5th. Liz and Don, formerly of Muskegon, Mich., now reside at 8064 Causeway Blvd. So., St. Petersburg.

W4NOK-Jack Adams now has the Amateur Radio Achievement Awards Directory completed and has mailed hundreds of orders placed prior to publication.

W4KM-Elmer Kinkade, of Tampa, became a Silent Key March 29th. Our heartfelt sympathies to his XYL.

WA4UTW-John Garrett, of Palm Harbor, in Mease Hospital, Dunedin, having suffered a heart attack. Hope he is well on the road to complete recovery. Also trust Loretta, XYL of W4FPC-"Mac" McSheehy, has fully recuperated from her recent bout in the hospital.

DADE RADIO CLUB NEWS

By W4EDP–Jim Bonnell

The annual election of officers took place at the meeting on April 2, and the following were elected officers for the coming year. President-W4WYR Evelyn, V.P.-W4BYB Rex, Secretary - W4EDP Jim, Treasurer - WA4BAL Bob, Trustees, or more properly, board of directors - W4LPG Paul, W4HOS Tracy, and K4KJA Gene.

W4BYB and K4JWM operated a station in the Florida qso party with the club call W4NVU/4 and ran up a beautiful score for us. Sure hope they take the trophy so we will have the incentive to get a permanent home for the club, so the trophy will have a permanent resting place. That is on the same level as the girl that bought a pair of shoes on sale and then spent fifty bucks to get accessories to match the shoes!

Have not heard too much out of the Field day committee lately, but they assure us that they are working hard on the planning and getting a good location picked for the best Field day yet. There are some changes in the Field day rules this year. You may get left on the judges floor.

Refreshments served at the last meeting included a birthday cake for W4GJ Walt, who was scumpty years old. Congratulations, Walt, stick around for lots more birthday cakes.

FLA. VHF SIDEBANDERS

By R.D. Ralston–K4LFF

Another month an no response from the column in any way, so I'm beginning to wonder. Oh, well! You can't win them all.

By the time you read this, I hope to be back in business as far as being on the air with a half way decent signal and also health wise. The doctor says I am improving very well, and it's about time after 4 months on the sick list.

Ken-W4FBL in Jax is doing very good on SSB, but we still need to have improvement on the acitiity in all of north Florida. There are many in the area on AM but most every one has trouble in hearing them due to low audio etc.

For you county hunters: Look for K4LFF, the only 6 meter station in Nassau county. We are located at Fernandina Beach (P.O. Box 945) on Amelia Island, just 2 or 3 miles south of St. Mary's, Georgia.

Leo–WA4MHS was telling me he plans on having a SB-110A on soon, and will be looking for CW when ever possible. I guess most everyone is hoping for rain to quiet the power lines down. Jim – W4DPH says it is really rough down Clearwater way. I have been very fortunate with almost none since moving up here.

WESTERN FLORIDA NEWS

Frank M. Butler, Jr., W4RKH

Pensacola: K4NMZ renewed OVS appt. WA4IZM is putting up 60' tower with TH-4 and 2m beams. Newly licensed is WN4JGY; he runs DX-40/HQ-110 and is counselor at PJC. The Five Flags ARA sponsored an auction and swap shop. K4CFS is editor of their Newsletter. W4UUF, reports several good 2m openings this month.

Milton: WN4IYV just received his ticket.

Fort Walton/Eglin AFB: W4IID went high power on 2m with an Ameco TX-62 and VFO. City of FWB donated its old police radio equipment to Civil Defense for 2m ham use. WB4GYX received Net Certificates for QFN and RN5.

Panama City: WA4JIM, WA4WHW and W4RKH assisted in delivering an emergency message from Canada to a visitor in town. K4PTP is back home after retiring from USAF. Four stations are on AFSK on 145.898 Mc. K4-VFY renewed appointment as ORS. W-A4IMC is working on 2m FM gear.

Chipley: W4IKB handled emergency traffic for the USS Findley when ship's regular radio went out.

Tallahassee: W4JGD was appointed EC for Leon County. Madison: WA4-GHE is mobile on 2m FM. Cross City: K1FVW/4 is building 811A linear.

SO. MIAMI RADIO CLUB

By John W4NE

With field day only a few short weeks away, SMRC probably like many other clubs, is beginning to dust off plans and equipment in preparation. This year we hope to make it an "honest to gosh" field day and to that end a committee of 3, Jerry WA4WUD, Ernie K4KIC and Jim KeKIL have been delegated to search for a suitable location remote from power lines - a real field. Sufficient equipment is reported as available including a 2-1/2 KW power plant offered by Sandy WA4KSD, and a fair size tent from another member. Several members recall our REAL field day on the ocean front at Crandon Park 5 or 6 years ago, with nostalgia.

Although progress seems to be somewhat slow on the printed circuit board code oscillators, the project is still moving along and at next meeting some good results should be evident.

A worthwhile suggestion developed at our last meeting - each member to undertake helping 1 or 2 novice licenses build up code speed. The key point of the idea however, is to conduct such code practice independently in several members' homes rather than as a larger class at club headquarters; the idea also holds promise of being extended to technicians striving for their "general," or generals to achieve the "advanced" rating. We should hear some practical progress on this idea in the near future.

Mel WA4EVX, our program chairman is certainly doing an excellent job. Some good technical speakers and demonstrations are scheduled

HILLSBOROUGH AMATEUR RADIO SOCIETY, INC.
WA4GJJ

SPONSORS OF
THE TAMPA HAMFEST
October 13, 1968
LOWRY PARK

MEETS 4th TUES. - 7:30 P.M.
ODD FELLOWS TEMPLE
6220 NEBRASKA AVE.
Mail - 4401 W. Cayuga 33614

DADE RADIO CLUB, INC.
W4NVU
SPONSOR OF TROP. HAMBOREE
- MEETINGS -
3rd Tuesday
Each Month
At Museum of Science
and Natural History
3280 S. Miami Avenue
Miami, Florida

FLORIDA SIDEBAND ASSOCIATION
Meets Sundays 2200 GMT - 3940kHz
FSBEN – Thurs.
3940kHz
0030 GMT
FAST Net
Daily
3940 kHz
2300 GMT
A FRATERNAL ORGANIZATION
All Sidebanders Always Welcome

NORTH FLORIDA
AMATEUR RADIO SOC.
NOFARS
W4IZ
MEETS
2nd THURSDAY
AT 7:30 P.M.
DUVAL CD HDQTRS.
107 Market Street
JACKSONVILLE, FLA.

ARRL W4/K4 QSL Bureau
PAT PARRISH, K4HXF
R.F.D. 5 – Box 804
Hickory, N.C. 28601
WA4 - WB4 - WN4 - QSI Bur.
DICK TESAR, WA4WIP
2666 Browning Street
Sarasota, Fla. 33577
Send No. 50 SASE Today

for early summer meetings as well as some film programs. An ARRL film titled "An introduction to SSB" was viewed with considerable interest at April 5th meeting. Again, we invite all SW Miami area hams to come visit with us 1st and 3rd Thursdays at Ponce Jr. High School 8 p.m.

ORLANDO RAMBLINGS

Hal, W4BKC

Our esteemed Prexy Jess, W4CLJ has become one of those lucky individuals who can thumb his nose at the alarm clock in the morning - w o t t a satisfaction! Jess and Agness took off on a short trip to satisfy his retirement.

Just imagine having all the time you want to get on the air — ah me.

At this time, with the Hamfest coming up rapidly, minor disasters are occurring with increasing rapidity. They are all resolved by H a m f e s t time. Not without the addition of a few gray hairs however.

We were fortunate in getting the Orange Blossom Chorus State Champs for Sat. evening entertainment. If you haven't heard this group you are in for a real treat.

No word from Wes, K4KRG yet. You don't suppose he forgot to notify Florida SKIP of his change of address-tch tch tch. He could use that red phone if he can find a spare plug. Gotta figure no news is good news?

Guess it's about time for the old sulphur and molasses. Boy have I got the spring fever. See most of you at the Hamfest. Time for my nap.

B.A.R.C. NEWS

Jim Wilson W4GDK

Our Club honors the memory of a longtime member - Ted Sprink W4AW who passed away almost in the arms of his fellow hams during the March meeting of the Club. To the last he served, having just given a short talk to the members.

Our Emergency Coordinator WB4-CKY calls attention to the new Goldcoast Emergency Net which will combine the nets of Palm Beach, Broward and Dade County emergency nets: Times are 8 p.m. Monday 50.44 mc. and 8 p.m. Tuesday 145.23 mc. He invites volunteers for NCS also.

Attention is called to the canoe race which is planned by the Ft. Lauderdale Recreation Dept. for June 1. There are contestants coming from all over the country. More than 100 canoes are registered. VHF coverage of the event is planned and observation points along the New River route are being set up. Volunteers to man them are requested.

Broward Amateur Radio Club meets at the Broward County Medical Bldg., 2200 So. Andrews Ave., Ft. Lauderdale at 8 p.m. the 2nd Wednesday of each month. All interested in ham radio are cordially invited.

INDIAN RIVER NEWS

M. P. Earnhardt, WN4HNE

Well Norm Holzweg, WB4EBH, formerly a tech will be heard on the air shortly working the lower frequencies with his newly acquired General ticket and that Swan 350. Horm finally finished his ham shack and is ready to move in. Speaki ng of ham shacks, Don Klobe, WA4-KJV, is about finished with his and it certainly is a nice one.

The sunspot activity as most of you are aware of is just about at its peak and with it has come DX. Just the other day, Cape Verdes Island, Venezuela, and a novice in the Canal Zone could be heard with an S9 CQing local amateurs. It seems the 15 meter band is open for DX toward South America for about 2 hours in the evening here around Cape Kennedy at about 2330-0130 GMT. It was quite a thrill working the Canal Zone for an hour with 75 watts on both ends!

This past month our programs included a talk on transistors and printed circuit board design plus a mock extra-class exam which proved rather interesting.

If anyone likes 'Bunny Hunts' then they should come to the one being held May the 5th at Clearlake Park in Cocoa, everyone is invited, both amateur and non-hams.

I think this will be my last article for Florida Skip due to the fact that I will be away at the University of Florida very soon, and so I want to take this opportunity to say I certainly enjoyed being the correspondent and thanks to Don and all the other members who helped me with the news and other items. 73 Mike

GULFSTREAM SOCIETY

by Al Suhr, WB4AID

For the past several months we have not had many programs at the regular meetings of the Gulfstream Society of Amateur Radio Operators. What programs the members have witnessed were specially prepared for the electronics we work on so much. The meeting last Friday was much, much different - we had a real unusual guest in Tom G. Smith, City Manager of the City of Lake Worth. Tom was president of the Lake Worth Radio Club, seven years he held the chair as president before the war (WW II) and after.

The program Tom gave was very informal, and consisted of a history of amateur radio in the old Lake Worth I knew as a boy. Those were the years of early hurricane problems in this area, 1928, and the American Red Cross, and a relay point for the Army. Tom told of the equipment that served more than one community in time of need. The former members of that old Radio Club are now residents in far away places, but all have made a good showing in the professional field of radio. At this time they occupied the same headquarters room that now serves our Society. Their old call was W4AWO.

The recent college "days off" brought Warren Little back to the meetings as a lecturer. WA4EFA (Warren's other name) is an EE major at the U of F in Gainesville, and he lectured on radiation and propagation. It is indeed interesting to watch these young fellows mature as the years go by.

Just had a letter from Ed Wilder, WB4AID, now on duty - as you will remember - with the Army in West Germany. Ed informs us that he has received his new German call - DI4QM, and expects some contacts with his friends in south Florida. So far, he has had bad luck - but we can change that can't we. So now we have members with foreign calls as well as living all over the world.

The project committee is really doing some thinking. It looks as if they have found some good advice from K4EBZ, Mel Wrobbel. He has some dope about revising the room that may help the acoustical problem. Then, WB4AKH, Dick Kidder, chimes in with more good info, and then before you know it, the committee has pulled a Tom Sawyer, and every9ne is doing their work. That is good manipulation.

New Literature Available

TV/FM Antenna And Audio Accessories Catalog - FREE from Mosley Electronics, Inc. Over 100 lead-in components for all lead-in types: coax, shielded and other heavy-duty twin lead cables, and flat twin lead - including the new "Whole House TV/FM Wiring Kit" for simultaneous operation of two or more receivers. Matching Transformers, splitters, plugs, wall plates, switches, and many more items are shown and described.

New Amateur Radio Antenna Catalog - 26 pages, FREE from Mosley Electronics, Inc. All types of antennas available - beams, verticals, dipoles, short wave listening, mobile, and accessories for stacking, mounting, conversion, and coax lead-in. Included is a comprehensive discussion of Traps, Feed Systems, Unbalanced Radiators, SWR, and other pertinent topics. Write Mosley Electronics, 4610 N. Lindberg Blvd, Bridgetton, Mo. 63042.

May Specials at...

THE NEW HAM SHACK
at Tel-Appliance in Sarasota

• CLEAN, GUARANTEED RE-CONDITIONED TRADE-INS

SWAN 350, perfect	$275.00
SWAN 117XC	$ 69.00
NC182D mint	$ 99.00
HXL-1 2KW Lin.	$229.00
DRAKE 2-A w/2 a/c	$139.00

Bring or Mail This Ad For These Special Prices!

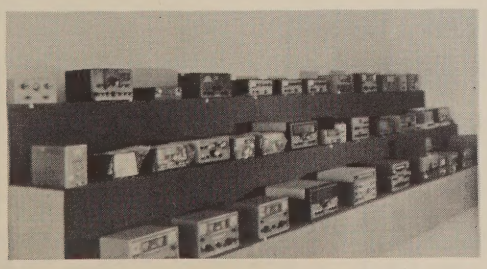

Mail Orders Shipped Promptly Anywhere!
Let's Trade!

In Stock:
New, Swan 500 C, Swan 250, Galaxy V Mk II, Drake R-4B and T-4XB, National 200, National NCL-2000.

• We Buy, Sell, Trade Ham Gear
• Expert REPAIR SERVICE, Alignment

"GET IT FROM GRID" AT . . .

Tel-Appliance Center, Inc.

1966 Hillview Street, Sarasota, Fla. 33579
Ansel E. Gridley, W4GJO Telephone: (813) 955-7161

ARMY MARS

by Joseph C. Patterson, AD4TZI

Third Army MARS members are "hitting the books" again, having received and welcomed the 1 March, 1968 Supplement to MARS-Army Communications Manual Sig 439-2. This Supplement appears to present in somewhat simpler language and more understandable form many of the important regulations covering Army MARS operation. It will be especially appreciated by some of our newer members who have never received Manuals but have been anxiously waiting for their copies of the long-promised revised Manual and who to date have had to depend upon attentive ears and retentive memories to learn the whys and wherefores.

District Director Gene Farthing, AA4KHT, again reminds members of District Two that Sig 81 cards, as mailed by members at the end of each month, must now list under "Comments" the total number of messages sent and received during that month. See Appendix B, Page B1, of the new Manual Supplement, for an example of a properly filled-out Sig 81 card.

Long - time faithful participants in the two-meter Juliett Net are encouraged by reports that before long a new repeater station will be put into operation at Miami. It is believed this will end much of the frustration now being experienced as a result of the up-and-down reception between Miami and the Fort Pierce repeater. It's been a long wait but now it appears that finally the faithful are going to be rewarded for their patience and their continuing efforts.

Here's a very important note for your calendar. Mark down Saturday, May 18 and Sunday, May 19 as Armed Forces Days. And keep your eye peeled for further announcements concerning frequencies, official certificate awards, etc. Be prepared to participate if not at all possible. 73, everybody!

HERE ARE A FEW of the Vero Beach Amateur Radio Club gang in their own club House. L to R back row: WA4VWY, Bill WB4COM, Connie; VBARC Pres. WA4ROB; W4KEE, Tom; and VP, WA4SCK, IJ Rovang. Front Row: L to R; W4KOZ. Stan; W4LEP, George Cook, ex-W2UOB and Hudson ARRL Director and WA4QVJ, George Jones. (Photo by W4DFZ.)

Whisperings From An Assistant SEC

Tom Chisholm W4FP/A4FP

As the months roll by (very fast for me) it seems that the ARPSC interest in East Florida Section is slowly but surely slipping. Resignations from a number of EC's, all good dedicated men, who have been abundantly blessed with technical knowledge, as well as leadership and excellent personalities have resigned rather than continue a losing battle against the growing lack of help or interest in many ARPSC members. Such items as participating in a drill once in a while, learning how to handle traffic, perhaps a wee bit of telegraphy, and mailing in their outdated AREC membership cards for endorsement by their EC's apparently holds no place in this "GO-GO" era.

The matter of the EC monthly reports to the Assnt. SEC is much the same. Each month, less and less reports are sent in. I realize that mailing or sending in a monthly report via one of the nets is no doubt a nuisance for many.

If we are to have any decent type of monthly record of our ARPSC membership and activity, the monthly report must be supplied each month.

I am mindful of the "I will be there if you need me" amateur. Goodness knows he has always played some part in most emergencies and although we might not know anything about his capabilities, and he probably knows less about his local organization. His participation is welcome even if some of it might be harmful. It might be better than none at all.

I have always envied the directors of the MARS outfits, as each month with few exceptions, all members forward their report cards with up to date data on the member station. Of course there is the free postage and the "goodies" which ARRL has not included in their membership plan, and after more than 50 years of successful operation free from scandal and rich in communications history I hold little hope for a "goodie" provision. I hope that we will have some volunteers to assume the responsibilities of an EC in all counties that are neglected at this date.

Whistlers

By: WA4NXA

They were first discovered in Austria in 1886. They are the oldest known radio phenomena. A six year investigation published in 1893 has gone unnoticed for more than one-half century.

Barkhausen re - discovered whistlers in WWI -- thought they were news!

The principle source of whistlers is the electro - magnetic energy radiated from lightning discharges.

They propagated as a radio wave, its frequency overlaps the audio range, and the 'signal' can be heard simply by picking it up on an antenna and applying it to a headphone.

It was learned that whistler propagation is by a route far out in space beyond that of normal ionospheric propagation.

Antennas for whistlers are erroneous -- audio amplifiers are used.

See QST, page 50, March 1960 and begin keeping a card file record of interesting articles you see published. It's good for your education.

The above article will give you other references.

(from LARA–Ham Salad, WA4TJS, Editor)

SUPPORT FLORIDA SKIP ADVERTISERS

"OOP'S WE GOOFED" DEPARTMENT

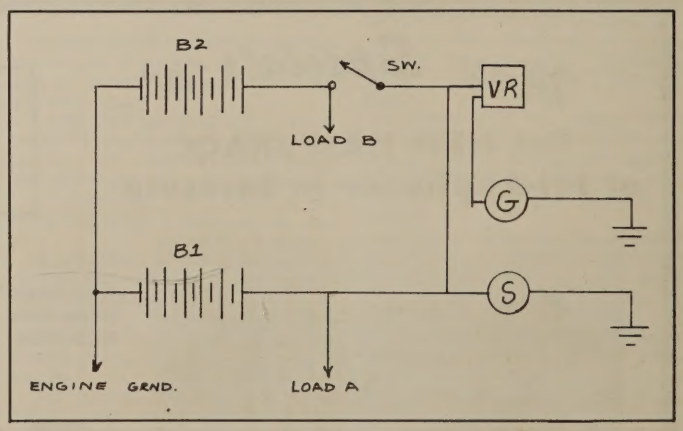

RE:

MOBILE BATTERY TIP
By K4UGC

Please accept this schematic as the correct version of that printed on Page 8, April 1968 SKIP. This was my goof and not Dick's.

73
K4FQU

By AFB4JTK/AFC4BND

There is a number of reasons for the Air Force Mars program. There is a young man who was completely paralyzed last November. Since then he has recuperated to a point, thru therapy. AF Mars has handled about 50 messages to the mid and south Florida area from AFB6-CFQ, California, from relatives there. AFB4VTA of Lake Worth Florida, received a postal card from one of the relatives located here in South Florida. The letter congratulates the AF Mars program and its members on a job well done. This type of communication is the thing that makes it worth while.

The phone patching is still keeping all busy. With more than 10,000 patches to and from SEA in February, it is expected that much or more will be handled in March.

We hope that all last minute plans were made to attend the Orlando Hamfest. More next month on what happened there.

It is very encouraging to your editors to receive requests from AF Mars members out of the state of Florida, for applications to Fla. Skip, so they can read and enjoy this column. Much thanks for the encouragement fellows. This gives us the strength and fortitude to carry on.

Our chests are futher out than ever before. AFB4JTK Alan, and AFC4BND Hoppy, have been appointed co-publishers of the NEW Florida News-letter. As publicity directors, we will have a lot to print. All Florida stations reading this please let us know what you would like to see in the newsletter. This column will not stop.

We will still be looking for new AF Mars members and we welcome any and all states in Area "2". In Miami call AFB-4JTK at 624-3018 and AFC4B-ND at 759-9847. See you in Orlando.

USE YOUR ZIP CODE

Dear Gladys . . .

Got your letter OK. You poor kid, you sure do have your troubles and then some. Don't worry, honey, I'll have the door wide open and ready to slam shut and put the lock bar across it.

Goodness gracious, you're not the only dumb one either. I pulled a good boner myself yesterday. You know Herman has his stuff piled (and I do mean piled) in one end of the kitchen, with things all over and when I reach for a frying pan, I'm just as liable to get a piece of radio.

He was doing something with Clyde on the air and hollered for me to bring a pan adapter. The only thing I knew, I grabbed up my hot dish tongs and took them to him. (*&¢%$#@! They missed me but sure played hobbs with the glasses on the sink drain board. Was thinking of moving in with you for a while until I got your letter this morning. Hope Clyde can get the tower up again, without too much trouble. If he does, honey, you better stay a long, long way from those wires. If he don't like the weeds growing up around them, let him cut them down.

I can't write much now, (Herman's mother is coming to spend the evening and you know her), everything has to be just so around here or boy the snide remarks I hear (but am not supposed to). So you can see things are kind of hectic (I looked that one up) around here. Keep your chin up, honey, and we will drop over, IF I can get old stick in the mud out of the kitchen. (Wish he was there to cook).

Love,
Mabel

(Once again, thanks to our guest writer for the above. We still don't know who wrote it, but thanks anyway. Does anyone want to try? EDITOR)

THERE WAS PLENTY of goodies for everyone at the Fort Lauderdale Auctionfest. Jack Wainwright W4KY ex-W4IEH reports this was their very best attendance and profit-wise. W4LVV our SE ARRL Dir. did his usual good job keeping things under control. "How much and I bid on this -- whatever it is . . ."

(Photo by W4IEH)

Good CW Operator Worth 5 DB!

From time to time someone mentions what a good operator W8--- is, or you notice a certain ham seems to get through more often. Earlier in QST there appeared a series of artciles on "Station Design for DX", by W3AFM, in which the equipment aspect of a good station was covered very well. This was followed by a letter from W2VYA (Feb. 1967 QST, page 46) in which he mentions the U.S. Army viewpoint on power relationships. The letter is rather technical, but briefly it states that if CW can be sent at 0 DB, in order to get the same reliability SSB would need to be 14 DB and DSB 17 DB. The Army's own study showed that a good CW operator, at 15 wpm, with lots of QRN and a receiver with a 1 kc. bandwidth can get the same accuracy as an AM phone op with a 22 DB higher signal strength. However, if the CW op is not so good, they figure his error rate gets bad at about 17 DB under the phone man. Hence, a good op is worth 5 DB over a not-so-good op.

Now here is some real food for thought! Apparently, SSB is rated as only 1/2 S-unit better than AM, but CW with a good op is considered 3 S-units better than SSB. We're sure that none of us will trade in our mikes for keys just for this reason only, but you should plan to get on CW once in a while to keep in shape. You shouldn't be satisfied to copy CW at your license speed, but strive to be as proficient as you can, no matter what grade of license you have. And besides - you'll work more stations!

(Dara - Bulletin - W8MGQ)

Another One of the Leaders...
SWAN Radio Amateur Equipment.

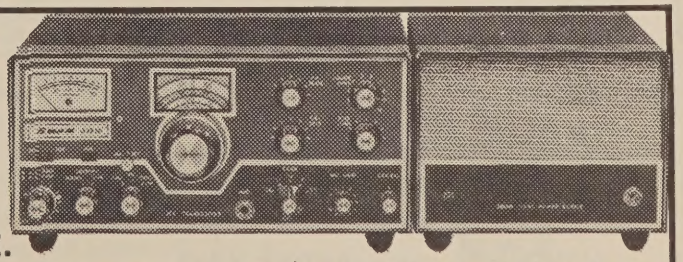

Another example of the top-quality "ham gear" kept in stock, in depth at Grice Electronics . . . ask for Swan.

GRICE ELECTRONICS, INC.
Phone 433-4616
320 East Gregory Street Pensacola, Fla.

NET NEWS

Gold Coast Emergency Net

By Jim Wilson W4GDK

Twenty hams from Dade, Broward and Palm Beach counties met in Hollywood Thursday, March 21.

Called together by Broward E.C. Tom Middleton WB4CKY and Paul Luithle WA4BAO the group laid the groundwork for a combined functioning of the emergency nets of all three counties under the name of Goldcoast Emergency Net.

It was felt by all that the new name would encourage inter-county participation and lead to much greater coverage in case of an actual emergency.

At first we will have a two meter net call on 145.23 Mc at 8 p.m. EST Mondays. Hams anywhere in these three counties and in others nearby are urged to check in to become prepared for any emergency that might hit us.

We need Net Control Stations, so please volunteer!

If you want additional information about these nets, you can write Tom Middleton WB4CKY or phone him at 989-1373. He will be glad to help you.

TROPICAL PHONE NET

By Ken W4SMK

Traffic activity is still holding up well on the TPTN as you can see in W4MVB's Column. WA4NEV has been doing some of Jess' paper work while W4MVB has been out of the State so send your traffic report to Bill until further notice.

We got another boost this month from the gang at W4DFU with the Engineering Fair at the University of Florida. They originated considerable traffic from the club station in the Engineering Building. Well done to the Gator ARC and also all the stations who helped relay the traffic.

We welcome the following additions to the net roll call, WB4DOL, Jim in Largo, WB4GUH, Dave at Daytona Beach, and welcome back to John, K4NKA in Stuart who didn't stay North very long. WB4AIW was on the sick list for awhile, but hear that Birch is doing better now. IeDAX has been out of State, but Herb should be back by the time you read this. We miss him especially since K4DAX is very regular on the roll call.

It's good to hear our ex net manager WA4COR back in action once more. Win has been QRL with the text books lately. W4GEJ. Amos in Jax has been added to the Tuesday and Thursday roll and we're glad to have him with us, also.

A brief plea for net members to be a bit more tolerant and considerate of the net control stations. We have had a few problems lately. If anyone thinks he can do a better job than a current net control I shall be glad to send you a roll call and let you try. Constructive criticism yes, but petty complaints have no place on a net. Thanks for your cooperation. 73

OLDEST PHONE NET ON AIR

KNIGHTS of KILOCYCLE

SUNDAYS

3910

7:30 A.M. Nov. to April

7:00 A.M. April to Nov.

QFN REPORT

By Bob Blumberg WA4OHO

QFN is most happy to welcome several newcomers into its ranks this month. These include: W8BZY/4, Jim at Patrick AFB; WB4FFX, Lew at Homestead and WB4FLW, Ted in Pompano Beach. Also happy to have W4COE active regularly again. K5-TYP Don (WA4LBM) has been checking in regularly from Mississippi. WA4NBT checked-in from his new home in New Orleans.

QFN statistics for the month of March showed that a total of 773 check-ins, composed of 71 different stations, handled 364 pieces of traffic in 87 minutes for a rate of Ø.42 messages/minute, slightly lower than last month.

By this time the Orlando Hamfest will be a pleasant memory for the majority of QFN members. I hope everyone had a good time!

The weather is getting hot, but things always run cool on QFN. Come join us and see for yourself. Your code speed is irrelevant—we welcome everyone. CU on QFN, 3651 kc/s daily at 233Ø and Ø3ØØ Z.

STAYING AFTER SCHOOL — — The Beaches Amateur Radio Society (Jacksonville) has begun a series of ham advancement classes and the local junior college is offering one-hour of college credit if you complete the course. Shown apple-polishing is Bill, WA4NEV and theory instructor Doc Staples, W4SME.

FMTN

By W4AKB

The following stations were added to the FMTN Roll Call in March: W4-VGE, Jim Camp, Everglades; K4OER, Charlie, DeBary; W4GAN, Melba, Tallahassee. We are also glad to have Hank WB4HMB at Homestead AFB and Carl W4SOM at Brooksville. We need all the outlets we can get.

This is my final column in SKIP for FMTN. For two years I have had this opportunity to be of service. I will be replaced by Herb W4LSR in Orlando. I am sure Herb will do a fine job and being more active than I am, he probably will give this column a real healthy boost. Anyone having anything of interest for the Net can mail it to Herb in Orlando and he can incorporate it in his monthly column. Again, let me say, it has been a real pleasure to represent one of the best – if not the best – nets in the State of Florida. Good luck to you all – I shall return!

FMTN meets every day except Sunday, at 12 noon EST or 1700z on 7230 khz. We welcome all modes, AM, CW SSB to check-in. Any station desiring to be placed on the roll should address a formal message to the Net Manager. He will see that the Net Control Stations are all advised.

During the month of March there were 26 sessions with 602 stations handling 393 formal messages. Average QNI was 23.2; average QTC was 15.1.

Our Net Manager is W4SDR, Clyde in Daytona Beach, and Asst. Net Manager is Herb, K4DAX in Bradenton, Florida.

73, Charlie

TOP TWENTY TRAFFIC TAKERS

Each month we are happy to list the top twenty traffic takers in Florida. Next month we hope to see your call here.

1.	WA4SCK	437	11.	WA4HED	123
2.	WA4FGH	406	12.	W4SDR	122
3.	WA4NEV	398	13.	W4SMK	98
4.	W4ILE	298	14.	W4UQZ	95
5.	K4YSN	182	15.	WA4TWD	78
6.	WB4AIW	172	16.	W4IAD	74
7.	W7BNR/4	172	17.	WA4OHO	68
8.	WB4DHZ	154	18.	W4FP	60
9.	WA4NBE	136	19.	WB4GYX	54
10.	WB4EPD	133	20.	W4ZAK	54

TRAFFIC HOUNDS

By Jesse H. Morris, W4MVB

NET	QNI	QTC	SESSIONS	AVG. QTC.
FAST	979	192	26	7.68
FMTN	602	393	26	15.1
FPTN	502	148	26	5.7
TPTN	759	234	26	9.0
QFN	773	364	62	5.87
GN	193	94	31	3.1
FATT	138	30	31	1.0
WFPN	767	114	31	

TRAFFIC MEN

202 STANDARD PADDED MESSAGE BLANKS . . . . . $ .90

100 MESSAGE CARDS . . . $ .90

ORDER NOW!

POST PAID - PROMPT SERVICE

Florida Skip—Box 501—Miami Springs, Fla. 33166

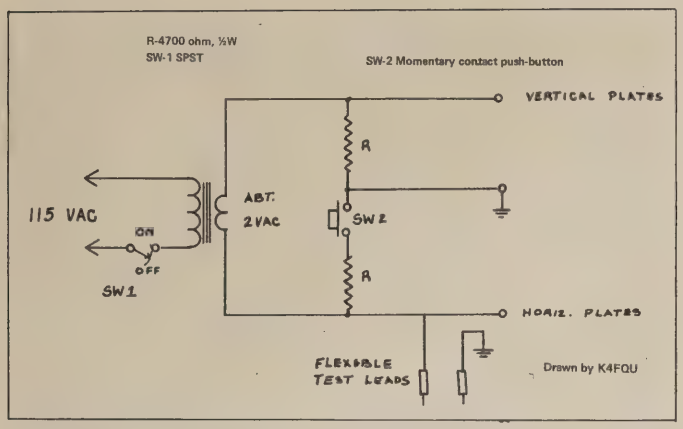

Comparison Checker for Solid State

By Dick Frederick, K4UGC

Solid State construction and the recent advent of Micro-Modular units has revived the old method of testing by comparing the good with the bad on an oscilloscope.

This simple adapter will allow a quick go-no-go check of components by checking the patterns on a scope providing one has a known good identical part to establish a standard by.

There is no shock hazard because the voltage is only a volt or two at the test probe points. Any old Audio output transformer which will furnish a couple of volts at secondary will work. Any two contacts upon a surface will produce a picture for comparing. This will work on identical parts, groups of parts or circuit boards.

K4UGC

'BUY FROM YOUR FELLOW AMATEUR' DEPT.

FELLOW AMATEUR: Here are several firms that have an interest in YOUR business! They have seen fit to support the FLORIDA SKIP by giving us a little revenue each month in return for your support. If you have a need for the services listed, you can't possibly do better than to deal with a fellow amateur, can you?

FLORIDORAS

EACH TUESDAY 9 A.M.

3933 kHz ALL YLs WELCOME

Pres. W4WPD, V.P. W4UF, Sec. W4EHN, Treas. W4BIL

WIRELESS SPAGHETTI NETWORK CLUB (WSNC)

FOR ITALIANS OF THE WORLD. MEMBERSHIP OVER 100. FREQS 14.166, 14.-300, 21.390 and 28.6. MORE INFO WRITE TO: Robert Pianella, I1WRP, Piazza delle Iris 28, Rome, Italy 00171.

COMPLIMENTS OF

INDEPENDENT COUNTY HUNTERS

"OTTS" K8CIR
"BERTHA" WA4BMC

For the BEST, get a time-tested

ROHN TOWER

Complete planning and erection service.

For more info – call or write:

ED ROLLER, W4WYJ
P.O. Box 894
Punta Gorda, Fla. 33950
(813) 639-2148 or 335-6651

MILK _____

NATURES MOST NEARLY PERFECT COMPLETE FOOD

W4GM – E.C. "Clark" Mattson
Okeechobee, Florida
Producers of Grade A Milk

don simcox & ASSOCIATES

ADVERTISING
LAYOUT
COPY
PREPARATION

CALL 821-8432
801 W. 49TH ST. HIALEAH

Tedco of Melbourne, Inc.

Galaxie
Hallicrafters
Elco
Ameco
Johnson

WHOLESALE ELECTRONICS
2678 N. BABCOCK ST., MELBOURNE, FLA.
Ted- WA4DHI Tiny-WB4EJX Ted-W4JHM

ROY'S RADIO & TV

ZENITH SALES & SERVICE
5527 S.W. 8TH ST. – MIAMI
ROY – W4ITO – FCC Commercial
Phone: 661–0823
CHARLIE – WA4CIK IRA –WA4BGL

Same Location & Ownership Since 1955

'YANKEE FONET'
3,975
(AROUND THE CLOCK)

W3ADK W3USG
W3BWH W8DUX
W3MMG WA3CHB

W4IAD W4TVK

Specials on Foreign Tape Recorders, Radios, Hi–Fi–Stereo Equipment
Parts–Service

SAFS, INC.

AUTHORIZED FACTORY SERVICE

"Hi Fidelity Engineers"

Hyman Lessin
John Horn

2115 J.F. Kennedy Blvd.
Tampa, Florida

NORTH PARK T.V. is Factory warranty on all SWAN equipment in Florida. We welcome any inquiry and will answer all correspondence.

– – ED KLAR, W4FAD – –
6420 Central, Tampa, Fla. 33604
Phone 232-3101

JENKINS SUPPLY CO., INC.

1686 Clearwater – Largo Road
Phone 584-5282
Clearwater, Florida 33516
K4OFI
Amateur Radio Supplies

23 Ways to Become a Lid

1. Tune up your transmitter (on the air) with your receiver off.
2. Break into a QSO when you cannot copy all stations.
3. On CW, send 'R RR SRI OM MISSED UR NAME and QTH." This is saying 'I copied solid, I copied solid, I copied solid, I missed some (or all)."
4. Spell phonetically after the other guy has given you "loud-and-clear" report.
5. Use Q signals on phone instead of old-fashioned Engl i sh.
6. On phone say "DAH-DE-DAH" or some other juvenile trash instead of "Over' or "Go Ahead."
7. Say "Over and Out." This means 'Now you talk and I'll listen -- I am finished with the contact."
8. Call CQ DX on top of a ZB2 who's putting in a Q5 signal stateside.
9. Send the call letters of the other guy followed by your own at the beginning and end of each transmission of less than three minutes duration.
10. When sending traffic on phone, say "To Tom Jones, common spelling."
11. On CW, end a CQ with "AR K" or "KN."
12. Run 300 watts on 20 meters SSB to work old Sam four blocks away.
13. End all your CW contacts with that cute little "shave and a haircut – two bits' routine.
14. Try to dream up some clever, self-styled phonetics to use for your call letters, such as "W-B-four-Mama's-Hot-Daddy." Instead of "W-B-Four-Mary-Henry-David" (ARRL) or "W-B-Four-Mike-Hotel-Delta." (ICAO).
15. On CW, always send a bit faster than you can copy solid.
16. Break into an emergency net just to tell the NCS that "you're around, in case he needs you' instead of assuming he will call for stations in your area if needed.
17. Use "QRX' for AS.
18. Never use GMT.
19. Do not use the Q and QN signals or abbreviations on CW.
20. Give the other guy a good signal report, even though he may have a T-5 note with chirp and clicks and be so weak you can only get about half of his transmissions. After all, we DO want him to feel good, now don't we?
21. Never join an SSB round table or net at zero beat with the other stations. This takes out all the fun the other guys could have chasing back and forth between your frequency and the other station's frequency.
22. When the copy is rough on both ends of a contact, be sure to make long transmissions instead of keeping them short and knowing when you lose the guy.
23. Never use Vox, or (on CW) fast break-in. This way you can talk to your heart's delight without the fear of the other guy breaking for a fill.

Please bear in mind that this is only a partial list, and that with a little thought and effort you can come up with many more ways to become a first class LID. Do YOU qualify?

-- Ed W4UQZ

P.S. No amateur's library is complete without a copy of W4MLE's very fine "The Radio Amateur's Operating Manual." It is available from ARRL headquarters for a buck and is worth every cent of it (and more!). OUCH!

(From Ground Wave – WA4OQX ED.)

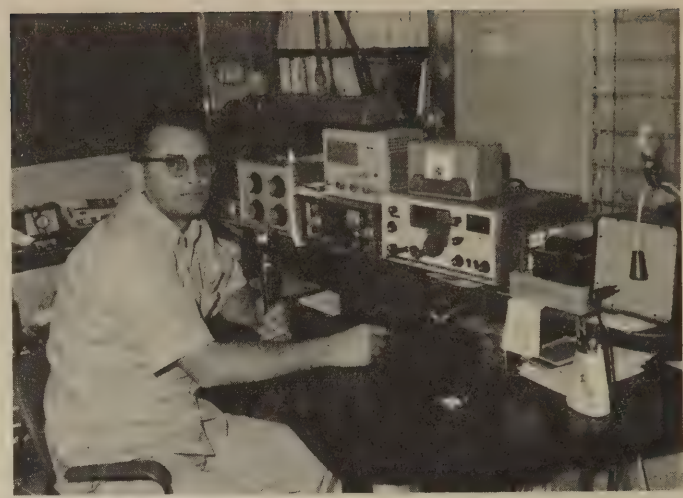

MEET EARL SPENCER, K4FQU our tech and SKIPeroo editor. Earl is also starting a cartoon column. K4FQU keeps his station in Fort Myers in top notch condition as shown here and ready for any emergency. Our sincere thanks to Mr. Spencer for all his help to bring you a better SKIP.

Amateur Radio to Rescue

By Frank Butler, W4RKH

Described below is a Public Service activity of amateur radio which took place recently.

On March 16, 1968 W4RKH, SCM of Western Florida, received a call from VE3AXQ, Burlington, Ontario, requesting assistance in delivering an emergency message to his brother - in - law and family who were vacationing in Florida. The family, Mr. & Mrs. Alvin Taylor and their four children, were believed to have arrived in Panama City, Florida that day, March 16, to spend a three-week vacation. After trying unsuccessfully to locate the Taylors by means of telephone calls to the local police and to one motel, VE3AXQ contacted Noel Eaton, VE3CJ, ARRL Canadian Director, who suggested getting in touch with the West Florida area ARRL SCM for local assistance.

Upon receiving the information at 2020 local time, W4RKH tried on several ham bands to contact Panama City, some 60 miles distant. About 15 minutes later WA4WHW was raised on 2-meter FM, via the Tyndall AFB MARS repeater. He passed the information to the local ARRL Emergency Coordinator, WA4JIM, who arranged for an announcement on the local TV station. Mr. Taylor saw the announcement and contacted his relatives in Canada later that same evening.

The next morning, WA4WHW, not knowing for sure that Mr. Taylor had been contacted, started calling all the larger motels in the area. After some 26 calls, he located Mr. Taylor and ascertained that the message had been received the night before, via the TV announcement. 73, W4RKH

New Repeater Station

The South Florida FM Association of Greater Miami announced recently they have received their FCC repeater license (WB4HAA). Their repeater is now in full operation on two meter FM, usually in the evening until midnight. Frequency in is 146.34 and retransmitted on 146.76.

We hope to have a full story and photos next month. - K4GSN.

SUPPORT
FLORIDA SKIP
ADVERTISERS

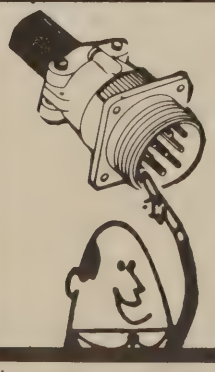

AMPHENOL AND HARD-TO-GET PARTS
BENDIX
CANNON
– MIL SPEC CONNECTORS –
ORDER DIRECT FROM OUR HUGE WAREHOUSE STOCK
SURPLUS GEAR IN ALL CONDITIONS
THE HAM SHACK
2211 N.W. 36th ST., MIAMI, FLORIDA / Phone NE 5-0378

Florida SKIP DIRECTORY

Each month you will find the following listings. Keep it handy. ARRL Officials are listed free. Florida Nets are listed free upon notification from net manager. Clubs listed for $12.00 per year. (Free to clubs taking box ads elsewhere.) Any individual amateur may be listed for $5.00 a year. (The ones who really care.) Let's fill up this page!

ARRL LISTINGS

Director, S.E. Division
CHARLES BOLVIN W4LVV
2210 S.W. 27th Lane
Miami, Florida 33133

Vice Director, S.E. Div.
A. L. HAMEL, K4SJH
220 N.E. 25th Street
Pompano Beach, Fla. 33064

SCM E. Florida
JESSE MORRIS, W4MVB
P.O. Box 1241
Jacksonville Beach
Florida 32051

SCM W. Florida
FRANK M. BUTLER, Jr. W4RKH
323 Elliott Rd., S.E.
Ft. Walton Beach, Fla. 32548

SEC East Florida
ANDY CLARK, W4IYT
41 Lenape Drive
Miami Springs, Fla. 33166

SEC West Florida
G.D. McKECHNIE, W4IKB
1000 N. 6th Street
Chipley, Florida 32428

Asst. SEC East Florida
TOM CHISHOLM, W4FP
P.O. Box 2273
Lakeland, Florida 33803

NET LISTINGS

QFN (all Florida)
Daily 2330 & 0300Z
3651 kc. Net Managers
W4BVE/ WA4OHO

FSBA Sundays
2200Z on 3940 kc.

FSBEN Thursday
0030Z on 3940 kc.

KNIGHTS OF KILOCYCLE,
Sundays,
1200Z on 3910 kc.

GATOR NET (GN)
Daily 1330 on 3651 kc
and 1630 on 7115 kc
Net Manager: K4COO

SATN South Atlantic Traffic Net
Mon. — Sat. at 0330z on 3945 kc.
Net Manager WB4DSP

TROPICAL PHONE TRAFFIC
NET (TPTN)
Daily except Sunday, 2200Z on
3945 kc.
Net Manager: W4SMK

FLA. AMATEUR SIDEBAND
TRAFFIC NET
(FAST) Daily except Sat.
2300Z on 3940 kc.
Net Manager: WA4NBE

WEST FLORIDA PHONE NET
(WFPN)
Daily 2300Z on 3957 kc.
Net Manager: WA4ZGI

FLA. PHONE TRAFFIC
NET Mon. Thru Sat.,
1200Z on 3945 kc. Net
Mgr. WA4CIQ

NOVICE HURRICANE
NET (NHN) Sat. & Sun.
at 1930Z on 7165 kc.
Net Manager: WA4YAK

INDIVIDUAL LISTINGS

"SLIM" and BERTHA EGGERT
WA4AZZ/WA4BMC
1510-17th Avenue-North
Lake Worth, Florida 33460
Regards to all our friends.

CLUB LISTING

DADE RADIO CLUB, INC.
(W4NVU) 1st & 3rd Tuesday,
Museum of Science
3280 So. Miami Avenue
Miami, Florida
Mailing address: P.O. Box 73
Biscayne Annex
Miami, Florida 33152

NORTH FLORIDA AMATEUR
RADIO SOCIETY W4IZ
2nd Thursday, 7:30 P.M.
Duval CD Headquarters
107 Market Street
Jacksonville, Fla. 32202

ST. PETERSBURG AMATEUR
RADIO CLUB, Inc. W4GAC
Meetings: 1st Friday
FPC Lineman's Assembly Hall,
25th St. & 25th Ave., N.
Mailing Address: P.O. Box 4026
For information phone:
544-1856 or 526-6731

ORLANDO AMATEUR RADIO
CLUB, INC. - W4PLB -
2nd Tuesday every month, 8p.m.
Red Cross Bldg., Central & Bumby
Mailing Address: Box 13267
Orlando, Fl a. 32809
2 Meter Net - 145.350 MHZ
Mon. thru Thurs. 7:00 p.m.
For information phone 644-9896

FLORIDORA YLs (W4FE)
All licensed Florida YLs invited
to join.
Mailing adress:
Pres. Shirley Hill, W4WPD
1710 Lambright,
Tampa, Fla. 33610
Nets: Tues. 1400Z on 3933 &
Sun. 1900Z on 7275 kc/s.

GAINESVILLE AMATEUR RA-
DIO SOCIETY, K4DPZ 1st Tues.
8:00 pm, Alachua CD Head-
quarters Basement, County
Court House. Mailing Ad-
dress: 1421 SW 13th Ave.,
Gainesville, Fla. 32601.

LETTERS TO EDITOR

(Continued from Page 2)

Air Force MARS program and by their lack of knowledge, are doing a great disservice to the Air Force MARS. I passed over the March Air Force MARS column with only personal opinions that went unvoiced. The April column was the clincher!

The Air broadcast is transmitted every Wednesday at 1800Z (1300EST) and Thursday at 0200Z (Wednesday evening 2100 EST) on 13995 kHz, 4873.5 kHz and 3293.5 kHz. These frequencies have been in effect since mid February. In view of the above current and actual schedule versus the first paragraph of their article there is a conflict. This conflict is the result of these two members being severally uninformed. Further, each Air broadcast is preceeded by the following: "The Headquarters Air Force MARS broadcasy is transmitted each Wednesday at 1800Z and each Thursday at 0200Z by RATT at 60 words per minute immediately followed by CW at 15 words per minute on 3293.5, 4873.5 and 13995 kHz."

In view of what is actually happening and the picture presented by your uninformed contributing editors, there is a vast knowledge gap. I hope this bit of information on Air Force MARS will set the picture straight.

Bill Elmendorf
W9DPE/AF9DPE

Contest Chairman:

This year found me on the wrong end of the contest. I must admit, the competition is rough on this side of the fence. Things weren't as easy as I thought they would be.

As usual, the Florida gang did a tremendous job. Wish I could thank each one of them personally.

Band conditions were lousy here with the exception of 20 meters. I could hear stations calling Florida on 10 and 15, but was unable to do any good on either band. Guess the skip wasn't in favor of La. All things considered, it was a perfect contest and I hope everyone enjoyed it as much as I did.

The rig here was a Viking 500 @ 500 watts input, a 75s-1 and a 14AVQ ground plane. Now, as the saying goes, JUST WAIT TIL NEXT YEAR! Hi! Thanks and 73.

Winky WA4NBT/5 New Orleans, La.
3419 Huntlee Dr. 70114

Dear Editor:

A few months back a club was started here in the Tampa Bay Area. The Tampa Repeater Association. We would appreciate it if you would put an article in Florida Skip concerning our organization.

The purpose of the organization is to install and maintain repeaters and start other clubs such as ours.

Our first repeater which is located in Tampa, is already capable of operation and awaiting a license. The input frequency is 146.340 MHZ and the output frequency is 146.760 MHZ FM.

We invite anyone interested in TRA or any other aspect of 2 Meters FM to write us.

Edward F. Boardman
P.O. Box 2812, Tampa, Fla. 33601

Editor:

Just couldn't be without "Florida Skip." Here is my humble offering of $2.00 for another year's subscription. You should be "knighted" er' sumpthin', for doing such a wonderful service for your fellow ham. Purely a labor of love. Only way I have keeping in touch with all the OT's who leave these parts and retire in the Sunshine State.

Ed & Pauline Raser
W2ZI - W2QCC, Trenton, N.J.

Editor:

Many thanks for your letter requesting information about HAM RADIO Magazine. Enclosed is our first issue which should give you a pretty complete idea of what we are up to.

As can be gathered from both Jim Fisk's editorial and my own we are out to publish the best technical magazine in the business, and we feel that with the authors we have lined up, we are off to a good start.

Full subscription details are on page 55. In addition we offer three years for $10.00 and this will be a part of our regular rate schedule after April 1. This is the best buy in the business.

Ham Radio Magazine
T.H. Tenney, Jr. Publisher
Greenville, New Hampshire

Editor

Did you ever have a radio repair job that had a short piece of wire down inside of some piece of gear and hard to skin back the insulation because of lack of room? Here is a solution. Take a finger nail clipper and file a notch the size of the wire between the two blades of the clipper. Insert the wire in this notch, squeeze and pull and presto, off comes the insulation ready for soldering. In fact several notches can be filed for different sizes of wire, or you can use several clippers if you have them around. I find this very good for tight places.

73 Hal WA4FIU, Dunedin, Fl.

Jim Wilson NØWCK-W4GDK

In Florida the Navmars program is divided into three administrative areas, namely Northeast, Northwest, and South. Many people do not realize what a large state Florida is. They do not take into consideration the fact that from Miami to Pensacola in the Panhandle is about 675 miles. These great distances and the population explosion in our state are the reason for the three area divisions.

Northeast Fla. has an Area Coordinator, Mrs. Georgia Denman of NØGAJ of Orlando; Northwest Coordinator is D.M. Gautier NØGAK of Pensacola and the Coordinator for South Florida is Jim Cummings NØGAL of St. Petersburg.

Up to just recently the Northern boundary of the South Fla. Area has jogged north to include the Cape Kennedy complex and the towns around it. This has now been changed so that all areas of Brevard County, north of the northern boundary line of Osceola County are included in Northeast Florida Navmars Area. This includes Rockledge, Cocoa, Cape Carnaveral, and all adjacent cities in the Cocoa Beach complex. All areas south of Bonaventure excluding the areas north of Satellite Beach, will be in the South Florida Area.

Navy MARS members from all three areas plan to attend the big Hamfest in Orlando on April 27. A large group is expected at the special Navy MARS meeting at 2 p.m. Saturday. Chief Earl Crawford, MARS Director for the 6th Naval District is coming down from Charleston as are some of the operators from the Marine Corps station at Camp LeJeune, Cherry Point, and Beaufort. These Marine Corps operators work regularly into our Navy MARS nets and give excellent liaison with the many Marine stations in Vietnam thru which come our thousands of messages and phone patches from the combat troops.

New members in the N.E. Fla. area last month were: NØKHN Bill Davis, Leesburg; NØKHW Dan Coleman and NØKJW Bill Bausch, Orlando; and nØKED, Doug Jacques, Jacksonville.

South Florida welcomes as a new and very efficient NCS on our 5 p.m. traffic net Ruth Christian NØXZA - WA4HED. Being active in the FMTN, Ruth is able to effect delivery on the Navmars net, of considerable traffic which would otherwise be greatly delayed.

NØJJB continues as the most frequent traffic rep from N.W. Fla. in the District net.

Recently established is the Tri-State net at 0200 on 4016.5 Kc LSB. This net exchanging traffic between Alabama, Mississippi and Northwest Florida has developed into such an efficient unit that Chief Crawford last week commended the net control stations and net managers for their fine accomplishment.

TYPETRONICS

YOUR SOURCE FOR TELETYPE PARTS AND EQUIPMENT.

SEND FOR PARTS AND EQUIPMENT LIST AND GOODIE TRADE LIST

TYPETRONICS
Box 8873
Ft. Lauderdale, Fla.
33312 W4NYF

A Few Hours Work and Behold! An Accurate Frequency Spotter

By K4PZW*

This simple spotting oscillator was constructed as a standard for an Air Force MARS frequency 4416 KHz however, the circuit is useable on any of the HF bands.

Although the circuit (Fig. 1) is not original, the layout of the parts (Fig. 2) used hre requires a very simple circuit borad. The board can be etched, but may also be scored with a sharp knife and the unwanted copper stripped away.

To assure good stability silver mica capacitors should be used where indicated. The high accuracy (32 pf) crystal used here was obtained from Savoy Electronics in Ft. Lauderdale, Florida, but other manufacturers list similar close tolerance crystal units.

The 2N404 transistor was used since it was available, but other PNP transistors should work just as well. If a NPN transistor is used, which would require reversed battery polarity, be sure to reverse connections to the zener diode.

The variable capacitor allows frequency adjustment of about 100 Hz.

The unit is housed in a small aluminum box and is coupled to the receiver input with a short length of RG 58 coaxial cable.

Only a couple of evenings are required to complete this unit, and there is a lot of satisfaction in being able to spot a frequency, within a few Hz.

*Robert J. Murphy
7103 Wendy Circle
Jacksonville, Fla. 32211

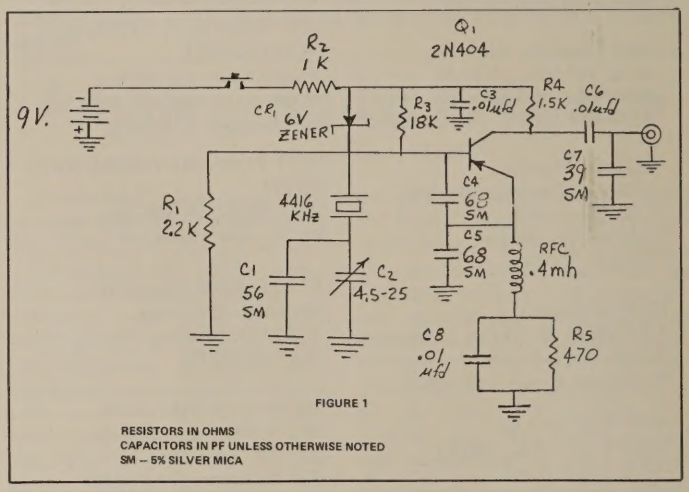

FIGURE 1

RESISTORS IN OHMS
CAPACITORS IN PF UNLESS OTHERWISE NOTED
SM – 5% SILVER MICA

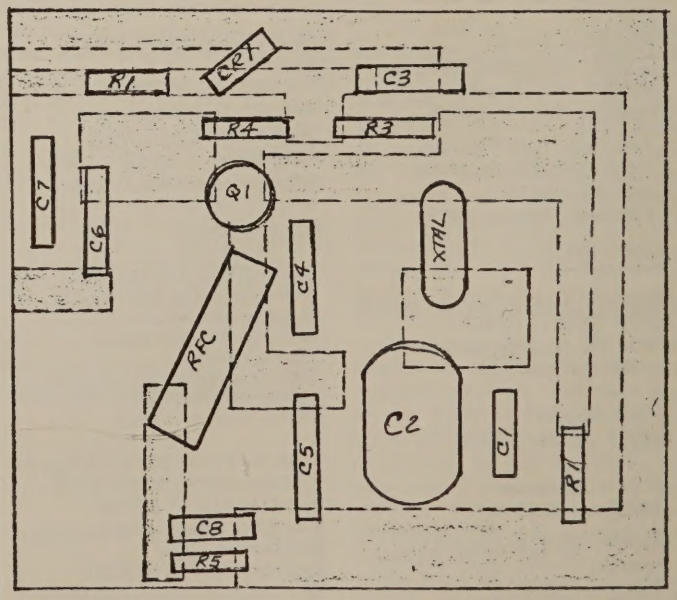

FIGURE 2

ACTUAL SIZE –
COMPONENT SIDE UP –
COPPER FOIL BELOW

HAMBAR

HAMBAR services of radio equipment ONLY will be available to all our subscribers, amateurs or non-amateur, at a donation rate of 25¢ or more for ten (10) lines and 5¢ a word thereafter. There are approximately seven words to a line. Space permits only one ad per month please.

Non-subscribers rate is $1.00 for ten lines and 5¢ each additional word.

To Commercial Business: Classified, undisplayed – 50¢ per line: Illustrative or General Display with border – $3.50 min., $60/page; Initial cost of cuts, additional. Cuts furnished, no charge. Deadline 10th of month.

An Advertising inch is measured 7/8" vertically on one column, i.e., 4 columns–40 column inches to a page. Rate card by column inch supplied upon request. FLORIDA SKIP, Advertising Department, P. O. Box 501, Miami Springs, Fla. 33166.

AMATEUR – WHOLESALE ELECTRONICS, (Div. of International Electronic Systems, Inc.), 280 Aragon Avenue, Coral Gables, Florida 33134. Franchised distributor for Collins, Galaxy, Swan, BTI, Hy-Gain, Ameco, EZ-Way, etc. Write for current used equipment list. No one anywhere will beat our price. Have a better offer? We will top it!! We trade and we service what we sell. Come in and see us. Phone 305-444-6206. See our ad every Sunday in the Miami Herald, Column II-08. (Paid adv.)

FOR SALE: - 11 Element Chushcraft 2 meter beam $5.00. 2 meter homebrew long John 16' boom $3.00. 6 meter 4 element beam 12' boom $8.00. 6 and 2 meter self contained converters with built in supply $25.00. 432 mc parks pre-amp $15.00. 432 mc converter 28 mc IF nubister $15.00. SK-600 eimac socket for 4X250 etc. el. collinear ant. for 432 mc $5.00. Ideal for ham TV light weight. Harry Conowal WA4OFS, 5025 N.W. 178th Terr., Opa Locka, Fla. 33054. Phone 624-4628.

WANTED: CB transceiver for conversion to 10 meters. Must have tunable oscillator, operate on 12 v. d.c. and 115 v.a.c. and preferably tube type. In need of repair OK except for power transformer, Inexpensive. W. Turner W4MND, 3624 Squire Ln., Orlando, FL 32806. Phone 241-1706.

Genius is the ability to avoid work by doing it right the first time.

FOR SALE: Heath HW-32 with 100 kc xtal calibrator and HP-23 a.c. power supply. Like new, works perfect $125.00. P&H electronics Linear LA-400B with 4-837's in grounded grid $75.00. Heath HD-15 phone used $20.00. Dow-Key relay DK2-60B, two line switching $12.00. Frank M. Sikorski W4CHG, 612 - 8th Ave., N.W., Largo, FL 33540. Phone 584-4025.

FOR SALE: VIKING Navigator $50.00. Globe SB-175 and PSA63A power supply $70.00, Conset receiver $85.00. Will trade for?? Jim Valin K4ZDZ, 1540 - 79th Ave. North, St. Petersburg, FL 33702 Phone 527-4747.

It often takes an important man to act unimportant.

FOR SALE: 6 meter package - Hallicrafters SR-46 transceiver, Ameco 621 transistorized VFO, 5 element beam, all 2 years old. Cost $275.00. Mint condition. Take $150.00 price firm. Wanted, modern, sweep generator with markers. Bob Glassman WA4MZL, 10445 S.W. 71st Ave., Miami, Fla. 33156. Phone evening 666-6300, Morning 226-7111.

FOR SALE: Hy-gain b-203 3 element 20 meter beam $40.00. Telrex TC-99 tri-bander $99.00. Dick Mays K4-AXC, 3960 N.W. 64th Ave., Miami Springs, Fla. 33166 Phone 888-6370.

FOR SALE: 40 foot painted, steel tower, complete with hardward. Seven foot triangular base. Will need work for rotor section, $25.00 or best offer. Hallicrafters' SX-117 like new with earphones. Ameco pre-amp, pre-amp power supply, instruction books. Best offer over $200.00. Thomas De Bray, K4KRJ, 212 SE 12 St., Fort Lauderdale, Fla. Phone 522-1577 after 5:30 p.m. or Novatronics, Pompano 942-5200 days.

FOR SALE: All excellent. 75S1, waters rej. $295.00. 32S1 and 516F2 speaker $425.00, with manuals and original cartons. HB TO Keyer with built-in paddle $15.00. Heath AM-2 SWR bridge $10.00. Waters speech compressor $15.00. Knight impedance bridge $4.00. Want two 572B tubes. Edward D. Flynn, 3118 N. Francisco Ave., Chicago, Ill. 60618 (paid adv.)

FOR SALE: CRAIG model 404 pocket tape recorder. $10.00. Gonset 2 meter communicator tranceiver $65.00. Portable radio transceiver 148017 Omc 6 or 12 volts $20.00. 5 station master intercom, master only $10.00. Marker generator Precise Model 630 $15.00. 2 BC-611 radio phones needs battery set $15.00. All in perfect condition. Mike Wahl W4NRF, 2822 Sheridan Ave., Miami Beach, Fla. Phone 531-1032.

FOR SALE: Heath HW-22-A 40 meter SSB transceiver with mike, a.c. supply and manual, factory aligned, mint condition $100.00. Ken Stuber WB4-CQJ, 200 N.W. 40th Ct., Pompano Beach, Fla. 33064. Phone 942-7854.

WILL SELL excellent Tower with PPT mike and heath d.c. supply $50.00. GE solid state mobile 2 meter FM on 146.94 Mhz with provision for dual frequency $165.00. Need KW linear and 2 meter Gonset III with VFO. Will trade. Lester Reyser WB4BPL, 1423 N. Grandview Ave., Daytona Beach, Fla. 32018.

When your yearnings exceeds your earnings, you've got all the incentive you need.

WANTED: VHF transmitters and receivers or transceiver. Preferably 2 meters. Please state model, condition and prize in first letter. T.Z. Bruce WA4TJS, P.O. Box 1328, Leesburg, Fla. 32748.

WANTED: Hallicrafters PS-150-DC used with SR-150. Marv Flynn KZ5-MV, P.O. Box 887, Albrook AFB, Canal Zone.

FOR SALE: Vibroplex "Original" semi-automatic key. Regular net price $24.95. Like new $15.00. Dan Zerick K4JHT, 4116 Roosevelt Street, Hollywood, Fla. Phone 987-4911.

ROTATOR WANTED: U. of Miami amateur Radio Club (K4HYE) is in need of a rotator. Anyone wishing to donate one contact Cal Barfield K4GSN c/o U. of Miami School of Engineering, MacArthur Engineering Building, Coral Gables, Fla. Phone 821-2924.

FOR SALE: Heath AT-1 transmitter $9. VFO 10-80 meters $7. Granco FM tuner $7. Harmon-Kardon PC-200 amplifier $9. Westinghouse FM receiver $7. Howard Stark WA4MTH, 9231 Caribbean Blvd, Miami, Fla. 33157. Phone 238-6430.

FOR SALE: Vertical trap antenna, Hy-Gain 18AVQ 10 thru 80 meters. Nylon guys, clamps, ground rods, mounting pipe, rg8u coax and connectors, half price. Complete-ready to go. Now in service. Hiram Overall WA4QXI, 2411 W. Arcadia Dr., Miramar, Fla. 33023. Phone 987-2720.

FOR SALE: Complete 6 meter station Gonset III with built in Ameco pre-amp. Gonset VFO, Gonset 60 watt linear with 2 spare 826 tubes. 0-500 ma mounted in bud meter cabinet with plug for linear. Turner 254-C mike with PTT stand, Finco 6-2 beam, Hy-Gain 3 element beam, Hy-Gain ground plane, 2 whips complete for cowl mount. CDR TR-4 rotator and control box. No trades, complete package only $250.00 firm. Gonset 2 meter 60 watt linear with spare 826 $60.00. Want webcor model 210 tape recorder with both heads working. Swinging choke 400-500 ma. 5-25 Hy more or less. Tom Chisholm W4FP, P.O. Box 2273 Lakeland, Fla. (Paid adv.)

FOR SALE: Swan 350 mobiel rig, complete with Electrovice mike, field strength meter and bumper mounting. Waters whip antenna with 10M and 80M automatch coils. Used very little all for $350.00. Stanton L. Burgess, W4-EFT, 2 Lake Haven Park, Dunedin, Fla. 33528.

FOR SALE: EICO model 720 c.w. transmitter. Heathkit Model GR-81 receiver Simpson Vom Model 260. DX-60 transmitter $55.00. Hallicrafters SX-140 receiver $50.00. VFO Heathkit HG-10 $24.00. Gary Metzger, 1156 N.E. 157th St., North Miami Beach, Fla. 33162. Phone 947-0704.

FOR SALE: 40 foot ROHN RE-4 tower with fixed base, tilt over base, house bracket $65.00. Robert Farnum W4PWC, 10290 N. Miami Avenue, Miami Shores, Fla. 33150. Phone 751-6822.

FOR SALE: Six meter station. G-50 Gonset J-21 mike, HW-11 Heath SWR meter, 30 foot Rohn, Hindged tower, finney 6 and 2 meter beam, AR-22 rotor. All in very good condition $265. Can be seen and heard at: Arnold Kogler WB4BJS, 3374 N.W. 33rd Ave., Ft. Lauderdale, Fla. Phone 587-6238.

WANTED: 40 to 50 foot crank up tower, Ham "M" Rotator and large tri-band beam. Will trade Honda 300 cycle for above. Hank Eschmann, WB4-HMB, 1265-A Nevada Ave., Homestead AFB, Fla. 33030. Phone 257-5415

FOR SALE: Heath Warrior (HA-10) $150.00. B&W5100 with 51SB $130. NC-300 $85.00. NC-100. National Selectojet $5.00. Pair new 4CX250B. $12.00. 3 new 7094 $15.00 each. Rex Trobridge W4BYB, 224 Payne Drive, Miami Springs, Fla. 33166. Phone 305-887-8110.

WANTED: All amateurs to participate in the 1968 Armed Forces day Communication tests, Saturday, May 18, 1968. SEE QST or CQ for complete listing of frequencies and times for NSS, NPG, WAR and AIR.

FOR SALE: VHF-1 Heath Seneca transmitter $75.00. NC-270 National receiver $75.00. Both in excellent condition. Mel Brooks, K4MZH, 8516 SW 15th Ct., Ft. Lauderdale, FL 33314 Phone 581-4199.

FOR SALE: Heathkit SB-400 transmitter $200.00. Will demonstrate on air by sked. H. Herbert Combs, W4KEB, Star Rte., Jensen Beach, FL 33457 Phone 287-6617.

FOR SALE: Heath HW-12, mike, HP-23 power supply, manuals $115.00. Presently on air. Sked? Collins, ART 13, unmodified $15.00. 12 inch enclosed speaker $3.50. Commercial built 500 to 500 or 8 ohm line amp. $5.00. New 40 foot, 4 section push up mast $12.00. B&W 5 position coax switch $5.00. Hallicrafters R-46 speaker with 500 or 8 ohm input $6.00. Simpson VOM (like new) with leather black carrying case $25.00. Heath Balum coils B-1 $5.00. Heath Q. Multiplier QF-1 with manual $7.00. Andy Clark W4IYT, 41 Lenape Dr., Miami Springs, FL 33166. Phone 888-3874.

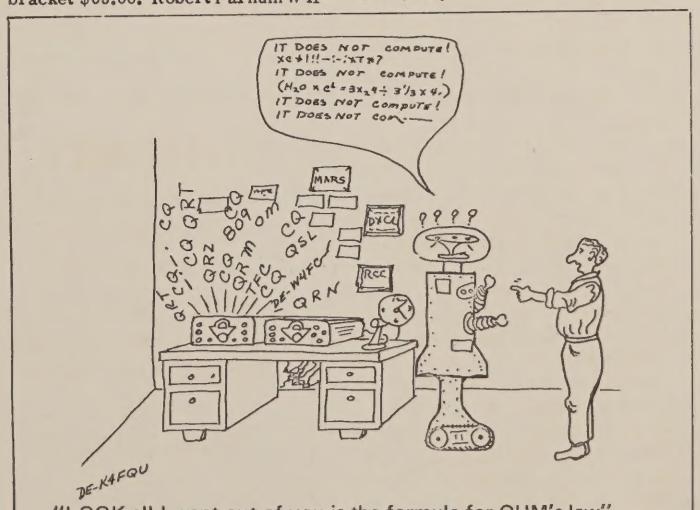

"LOOK all I want out of you is the formula for OHM's law" . . .

NEW AMATEUR RADIO ANTENNA - CLASSIC 10-15

Mosely introduces the Classic 10-15 - an amateur radio antenna designed especially to cover the popular daytime 15 meter DX band and the reopening 10 meter band. The Classic 10-15 may also be stacked with 20 and/or 40 meter beams. This new antenna from the Mosley Trap Master family of beams has an SWR or 1.5 to 1 or better with a feed point impedance of 52 ohm and incorporates the latest in matching - Broad Band Capacitive Matching.

The Classic 10-15 has a maximum front to back, and a forward gain of 8 db compared to reference dipole or 10.1 over isotropic source; it is power rated for 1 KW AM/CW and 2 KW P.E.P. SSB input to the final.

The antenna has a maximum element length of 9' 10", a boom length of 12' and a turning radius of 11' 7". The antenna will withstand a wind load of 110 pounds (EIA standard at 80 MPH) with a wind surface of 5 67'. Shipping weight is approximately 32-1/2 pounds.

Must For All FM'ers

All of our SKIP FM readers will be happy to know there is now a National FM Journal being published. M. Van Den Branden WA8UTB, 2005 Hollywood, Grosse Point, Mich. 48236 is managing editor. The FM Magazine is crammed full of current FM news, tips and repeater - type info. Subscription rate is $2.00 a year and well worth it. It is printed offset and ran 48 pages (QST size) in the March issue. The entire magazine is devoted to the FM Amateur and a must in every FM'ers shack.

NEW FCC RULES

(Continued from Page 1)

place from the new address.

On the other hand, there is no longer a limit to the time such a station may operate as a portable once the application has been filed, and the operator need send a notice only to the district engineer having jurisdiction over the new address.

Also, FCC has codified its rules for preferred call signs into a new section 97.53, without changing its previously informal ground rules. (ARRL OB 160)

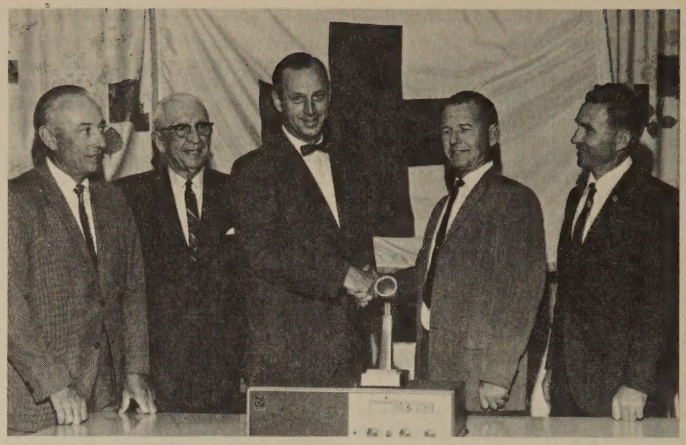

METROPOLITAN DADE COUNTY Civil Defense Bureau was recently provided with a new two way FM radio for the CD Communications Center at 5600 SW Eighth Ave., by the American Red Cross. Taking part in ceremonies turning over the new equipment, which will be used to provide two-way communications between the CD Emergency Operations Center and American Red Cross headquarters during local operations were, left to right: Charles H. Topmiller, ARC chapter chairman; Harry C. Ebright, ARC volunteer chairman of disaster service; Andy C. Clark, W4IYT, ARC radio disaster chairman; Harold Williams, W4YP communications officer and Howard W. Couch, Dade County CD coordinator.

–Miami Metro News Bureau Photo

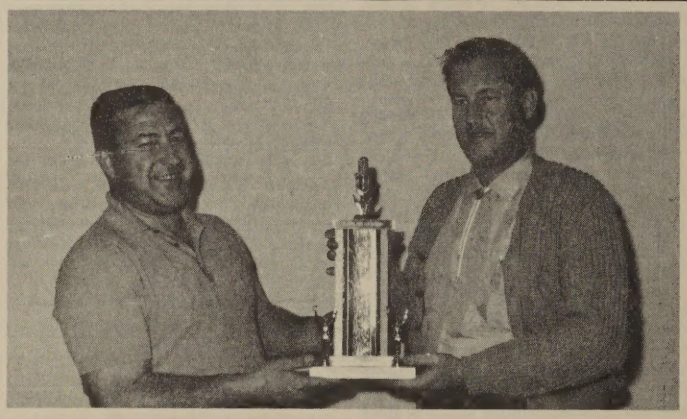

HERE THE 1967 FLORIDA SKIP Field Day trophy is presented from W4UBT, Bill to WA4UGO, Buford past president of the Beaches Amateur Radio Club of Jacksonville. Beaches club says this year they plan on making it 3 years for top honors in the one transmitter class. Any takers?

(Photo via K4YXO)

NEW TRAFFIC GUIDE

(Continued from Page 1)

all active traffic handlers, oldtimers and new-comers alike. It should be helpful to NCS and Net Managers as well as any NEW prospective traffic handler. All modes are listed including RTTY. Copies will be available from FLORIDA SKIP or from Regis Kramer, W4ILE at fifty cents per copy to help cover cost of printing and mailing.

REG, W4ILE
Route Manager E. Fla.

A Solid State Speed Control

By Don Smith, W4CQQ*

Drilling holes in different metals requires the use of a variable speed drill. Most of us don't own a multi-speed drill but with the addition of this little circuit your present hand drill can become a variable speed tool.

The Bridge rectifier provides the full wave pulsating DC Current for the SCR switch and control the angle of fire of the SCR. The Diode, D-5, is used to counter the back voltage developed by the drill motor. The speed of the drill is varied by the 10K potentiometer.

Diodes D1-D4 should be rated at 200 Volts PIV and have a current rating of at least 12 amps. D5 can be rated at 2 amps. The SCR should have a PIV of about 300 volts and a current rating of 25 amps.
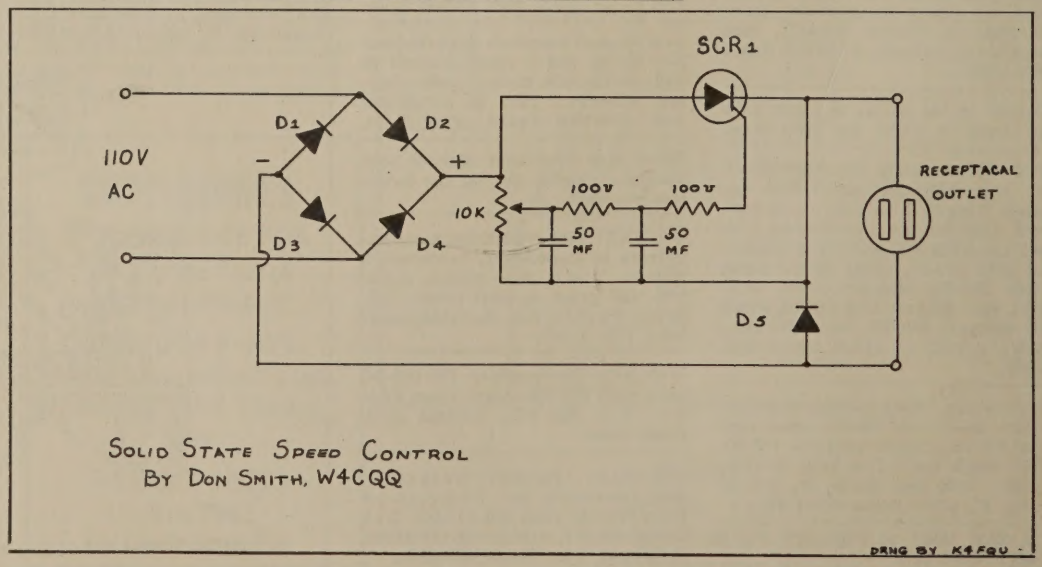
*5666 Flagstaff Road
Jacksonville, Fla. 32207